FlexiSpot

Standing Desk Engineering

White Paper

FlexiSpot E7 Pro Engineering Validation

Defining stability in standing desks through engineering, testing & real-world performance.

Stability | Performance | Safety | Precision | Durability | Efficiency

Version 1.0 | Final Report Date: October 12, 2026

Contents

Section 1 Purpose of the Report....1

Section 2 Summary of the Tests....4

Part I. Structural Stability....7

Part II. Power Performance....13

Part III. Safety Assurance....19

Part IV. Control Precision....28

Part V. Long-Term Durability....37

Part VI. Energy Efficiency & Environmental Responsibility....51

Section 3 Real-World Validation....54

Part I. Stability Under Heavy Loads....55

Part II. Smart Anti-Collision Safety....55

Part III. Desktop Strength & Durability....55

Section 4 Known Boundary Conditions....57

Appendix A–D Test List / Standards / Third-Party Verification / Certificates....58

SECTION 1

Purpose of the Report

This white paper proposes a six-dimensional framework for evaluating the quality of standing desks: structural stability, power performance, safety assurance, control precision, long-term durability and energy efficiency & environmental responsibility. The six dimensions are interrelated: power, structure, control and materials jointly affect stability; safety and precision determine whether each lifting movement is controllable; and durability and energy consumption concern the product's reliability and responsible performance over long-term use. Together, they offer a more complete way of judging quality, looking beyond appearance, marketing claims or first impressions from a short trial to how the product performs throughout its service life.

Among these six dimensions, structural stability deserves particular attention. This is not because it is independent of the others, but because stability is where users most easily notice whether the desk's various capabilities truly work together. A stable desktop reflects the combined performance of the lifting system, frame engineering, control coordination, materials and long-term durability. Stability is therefore both an independent dimension of the six-dimensional framework and a direct reflection of the overall quality of the entire standing desk system.

The purpose of this report is to make technical performance clearer and more meaningful for consumers. It connects rigorous testing with the real concerns behind long-term purchase decisions: as daily needs keep changing, can this desk remain stable, reliable and reassuring? The true measure of a standing desk is not whether it can complete a single movement successfully, but whether it can perform every movement consistently in daily use.

Accordingly, the following content does not treat test results as isolated performance scores. Instead, it starts from the failures consumers most often meet (desks becoming slower, noisier or wobblier, or losing height precision), explains their engineering causes and describes how a reliable standing desk should be designed and verified.

01 — Structural Stability

"Why does a standing desk wobble more as it rises higher?"

Wobbling is the problem users feel most directly. It makes writing less steady, causes the screen to shake during typing or video calls and weakens the sense of security when adjusting monitors and desktop equipment. This issue is not determined by a single component alone. The overall rigidity of the lifting columns, frame, base and connectors, as well as their ability to resist dynamic external forces at different heights and loads, all affect the final stability experience.

This assessment therefore combines static load tests, which verify structural strength under full load, with dynamic tests, which check that the desk stays sturdy during typing, writing, standing work and equipment loads.

02 — Power Performance

"Why do standing desks become slower, noisier or fail to drive their loads?"

As users add more monitors, laptops and other devices, the desk carries far more than the weight of the tabletop itself. If the lifting system and transmission efficiency are not matched to the real load, users may find lifting becoming slower and noise increasing, and may even worry whether the equipment on the desktop is adequately supported. Maximum load capacity is only the starting point; it cannot fully explain the lifting experience under real working loads.

This assessment therefore examines load capacity, lifting speed and operating noise together, to determine whether the desk can achieve powerful, smooth and quiet lifting in daily use.

03 — Safety Assurance

"When the desk meets resistance, can it protect people and equipment in time?"

Electric standing desks do not only operate beside office equipment; they may also share space with chairs, children, pets or objects placed underneath. When the lifting process encounters resistance or an obstacle, users need to know whether the desk can identify it in time and respond appropriately. Safety should not be just a promotional claim of an "anti-bump" feature. It depends on whether collision detection is effective, whether self-locking protection is reliable and whether the system remains under control when normal lifting is interrupted.

This assessment therefore examines anti-collision, self-locking protection and obstacle response, helping consumers understand whether this desk can provide trustworthy protection when unexpected situations occur.

04 — Control Precision

"Can the desk return accurately to your preferred working height?"

An ideal standing desk should accurately remember and return to the user's preferred sitting and standing heights, and remain consistent with every lift. When height settings drift, the two columns run out of sync or anomalies occur without clear indication, the experience becomes uncertain. The root cause usually lies in the control system's position recognition, motion coordination and fault detection capabilities. A memory-height function does not in itself equal precision; what really matters is whether it remains accurate, synchronised and predictable after repeated adjustments.

This assessment therefore evaluates position-setting accuracy, synchronisation, motion control and fault detection, to determine whether the desk can provide a reliable, intuitive height-adjustment experience.

05 — Long-Term Durability

"Years later, will the desk still be quiet, smooth and stable?"

New noises, lifting that is no longer smooth, loosening connectors or changes in the tabletop often do not appear on the first day, yet they directly affect confidence in long-term use. What consumers really care about is whether the motors, columns, frame and tabletop can withstand years of repeated use. The answer depends on whether key components and materials are designed for long-term loads, including the motors, lifting columns, frame connectors, electronic control system and tabletop material. Good performance when new does not automatically mean equally reliable long-term performance.

This assessment therefore focuses not only on the initial experience, but also on performance after repeated use and the durability of key components, helping consumers judge whether the product offers long-term ownership value.

06 — Energy Efficiency & Environmental Responsibility

"Does the convenience of electric lifting mean unnecessary power consumption?"

A standing desk may stay connected to the power supply all day, even when it is not running. For consumers who value healthy offices and sustainable lifestyles, it matters just as much whether the product wastes energy during operation and standby.

This assessment therefore centres on energy consumption testing, evaluating the energy performance of the electronic control system during operation and standby. It is combined with electromagnetic compatibility (EMC) and FCC-related tests to verify that the control system operates stably while meeting electrical regulations. The focus is not only on whether the desk can lift, but on whether it can continuously provide reliable electric height adjustment while keeping energy consumption low.

Beyond the systematic evaluation of key engineering performance, this report also extends some tests to real-world home office scenarios, to observe how technical performance translates into the daily user experience. To address common concerns about desktop stability, lifting safety and tabletop quality, the FlexiSpot E7 Pro underwent three supplementary verifications: high-load stability tests at multiple heights, obstacle-stop and reversal tests, and strength and surface durability tests on a currently sold optional tabletop. By combining engineering evaluation with specific usage scenarios, this report aims to help readers understand the practical significance of the test results more intuitively and to provide more useful reference information for product selection.

FlexiSpot believes that consumer confidence should be built on clarity and transparency. This means a brand should be willing to evaluate its products against rigorous but understandable standards, and explain why these standards relate to real use. This report is not meant to make choosing a standing desk more complicated, nor to suggest that more features mean higher quality. It aims to make clear the standards consumers are entitled to expect: staying stable at critical moments, being easy to control when lifting, providing protection in a home environment, withstanding repeated use and being responsible in energy and material use. By making these expectations visible, FlexiSpot invites readers to evaluate products by the standards that truly matter: not a promise at a single moment, but stability, reliability and peace of mind that endure in everyday life.

SECTION 2

Summary of the Tests

The FlexiSpot E7 Pro standing desk test framework is designed to meet the goals of six professional test dimensions: **structural stability, power performance, safety assurance, control precision, long-term durability and energy efficiency & environmental responsibility**. The comprehensive test framework consists of 6 modules covering 98 specific test items. The FlexiSpot E7 Pro standing desk has completed 35 tests in strict accordance with international standards. In addition, based on actual user needs, the engineering team designed and added 63 supplementary test standards to ensure consistent performance, reliability and delivery quality.

This testing programme is not a simple functional verification, but an in-depth stress test of the standing desk's power system limits and long-term reliability. We focus on six core dimensions to prove that this desk can not only "lift", but also maintain factory-level precision and composure after years of high-frequency use.

Standardized Laboratory Testing

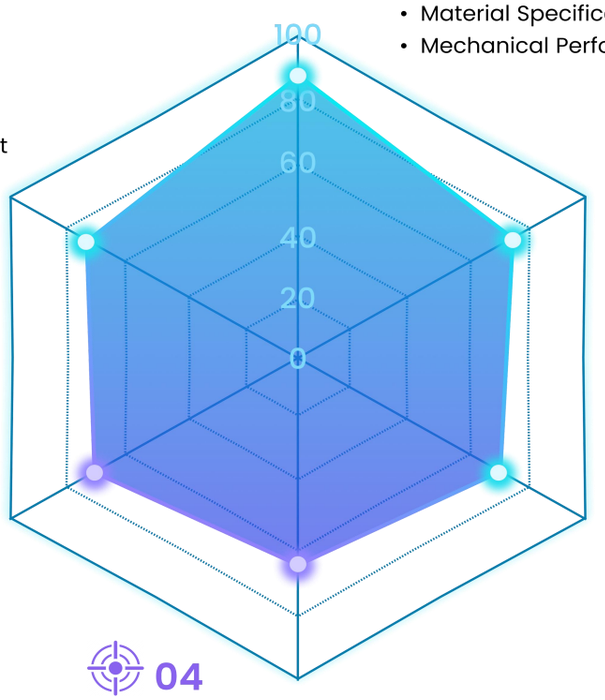

01
Structural Stability
- Material Specification Measurement
- Mechanical Performance Test

02
Power Performance
- Dynamic and Static Load Test
- Operating Speed Test
- Noise Level Test

03
Safety Assurance
- Collision Detection Test
- Self-Locking Function Test
- Electrical Control Safety Test
- Material Safety Test

04
Control Precision
- Parameter Accuracy Verification
- Smooth and Stable Lifting Test
- Error Codes and Troubleshooting

05
Long-Term Durability
- Lifting Cycle Test
- High- and Low-Temperature Test
- Keypad and Performance Cycle Test

06
Energy Efficiency & Environmental Responsibility
- Low Standby Power Consumption Test
- Conducted / Radiated Emissions Test

Structural Stability

- Verifies structural rigidity during dynamic lifting and under static maximum load. With the desk monitored throughout by gyroscope and pressure sensors, full-load operating noise remained stable below 50 dB (a hushed-conversation level) with no high-frequency whining. Under a 260 kg (573.2 lb) static load at maximum height for 72 h, the descent was <1 mm (0.039 in), with column locking force and transmission rigidity delivering a desk that "stands firm without creeping".

Power Performance

- Verifies the output consistency and redundancy of the power system across the full load range. Under the same load, speed fluctuation was ±2 mm/s [±0.08 in/s] (50 mm/s [1.97 in/s] unloaded / 40 mm/s [1.57 in/s] fully loaded), with smooth acceleration/deceleration curves and no jerking. In the 2 min/18 min duty-cycle thermal balance test at a constant 40°C (104°F), key component temperatures met requirements with no thermal-protection shutdown, demonstrating ample headroom in heat dissipation and motor design.

Safety Assurance

- Strikes the optimal balance between safety protection and operating smoothness. The trigger force and reversal distance were precisely calibrated: the system reliably detects obstacles (chair seats, chair backs, cables, the lower edge of the tabletop) and reverses to avoid pinching, without being so sensitive that slight resistance causes frequent "false alarms" and stoppages. The 180 kg (396.8 lb) load capacity itself is a direct verification of structural safety.

Control Precision

- Verifies the accuracy of height control and long-term precision retention. The reset cycle continuously calibrates the system zero point, preventing the "zero drift" caused by mechanical wear after long-term use, which would otherwise cause millimetre-level errors in standing height due to inaccurate height memory. The reset process also lets the control system relearn the Hall signals inside the motors, making position feedback more precise and reducing ineffective work and abnormal heat generation.

Long-term Durability

- Uses industrial-grade accelerated fatigue testing to verify "used for eight years, still like day one". 15,000 full-load cycles simulate high-frequency use of 4–5 lifts per day for more than 8 years. Lifting speed and noise performance showed almost no difference from the initial state, fundamentally eliminating the industry-wide problem of desks "getting slower and noisier over time".

Energy Efficiency & Environmental Responsibility.

- Embeds low power consumption and electromagnetic cleanliness into the core of the electronic control system. Measured standby power consumption is only 0.252 W, below regulatory limits and compliant with EU energy-efficiency Regulation (EU) 2023/826. It also passed CE-EMC (EN IEC 55014-1) and FCC (47 CFR Part 15 / ICES-003) electromagnetic compatibility certification, achieving "milliwatt-level" energy consumption and "laboratory-level" electromagnetic cleanliness for energy-saving, low-radiation long-term use.

Part I. Structural Stability

For a standing desk, "being able to move" is only the foundation; "standing firm" is the core. Structural stability directly determines the safety of the equipment on the desktop and how deeply you can focus on your work, and it is the hidden indicator given the highest weight in our test system. It means not only physical robustness, but also a psychological sense of security, allowing you to fully trust the space that supports your productivity, whether you are deeply focused at your desk or standing up to think.

1.1 Material Specifications

1.1.1 Enhanced lifting columns with C-shaped legs and a thickened 3.0 mm (0.12 in) steel base for greater overall desk stability.

1.1.2 Leg dimensions: high-precision seamless steel tubes of 70×70×1.5 / 65×65×1.5 / 60×60×2.0 mm (2.76×2.76×0.06 / 2.56×2.56×0.06 / 2.36×2.36×0.08 in), offering high strength, with a square cross-section that provides relatively consistent bending resistance in all directions. The columns feature high overlap (inner and middle tubes overlap by 180 mm [7.09 in]; middle and outer tubes overlap by 203 mm [7.99 in]), further improving the overall stability of the desk.

1.1.3 Carbon steel material: SPCC (low-carbon cold-rolled steel sheet with a smooth surface and high dimensional accuracy).

Fig. 1

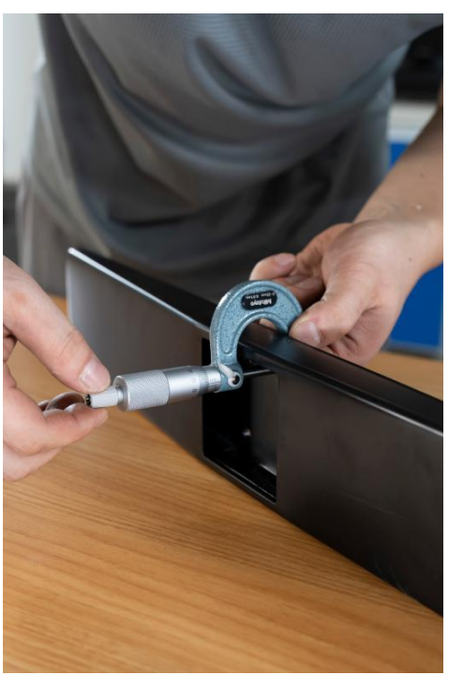

Fig. 2

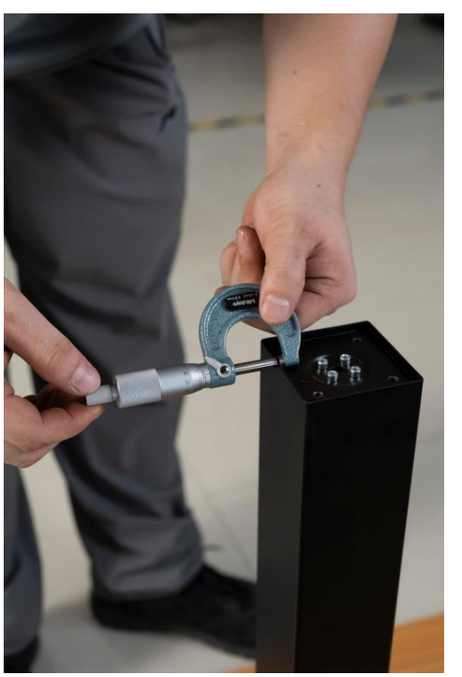

Fig. 3

1.2 Mechanical Performance

Overview: To evaluate stability performance, the E7 Pro standing desk underwent a series of tests focused on stability and structural strength. Rigidity and stability: the tests included measuring the displacement of the desktop and columns under a horizontal lateral push. The goal is to minimise lateral movement during daily operations (such as typing, using a mouse or leaning on the desk), ensuring stability even at maximum standing height. The tests also include mechanical tests for a configuration with an extra-large tabletop (2000 mm [78.7 in]).

Tbl. 1

Test ID	Test Name	Test Result
1.2 Core Test A		
1.2.1	Structural Rigidity Test	✓
1.2.2	Horizontal Static Load Test	✓
1.2.3	Additional Horizontal Static Load Test	✓
1.2.4	Vertical Static Load Test	✓
1.2.5	Additional Vertical Static Load Test	✓
1.2.6	Stability Test	✓
1.2.7	Vertical Stability Test	✓
1.2.8	Vertical Impact Test	✓
With Extra-Large Tabletop		
1.2.9	Structural Rigidity Test (2000 mm [78.7 in] Long Tabletop)	✓
1.2.10	Horizontal Static Load Test (2000 mm [78.7 in] Long Tabletop)	✓
1.2.11	Additional Horizontal Static Load Test (2000 mm [78.7 in] Long Tabletop)	✓
1.2.12	Vertical Static Load Test (2000 mm [78.7 in] Long Tabletop)	✓
1.2.13	Additional Vertical Static Load Test (2000 mm [78.7 in] Long Tabletop)	✓
1.2.14	Overall Wobble Displacement (2000 mm [78.7 in] Long Tabletop)	✓
1.2.15	Stability Test Under Vertical Load (2000 mm [78.7 in] Long Tabletop)	✓
1.2.16	Vertical Impact Test (2000 mm [78.7 in] Long Tabletop)	✓

CORE TEST A

Test Objective

Verify the rigidity and stability of the standing desk at different height settings, and ensure that it meets stability standards under conditions simulating normal working activities and daily leaning.

Reference Standard: EN 527-2:2016+A1:2019

Test Method

- For tests 1.2.1–1.2.3 and 1.2.6:
  1. Set up the test conditions. Place the desk on a flat surface, adjust it to the target height and apply the specified load. Secure the desk feet to prevent sliding.
  2. As shown in Fig. 7 and Fig. 8, apply the target forces from four opposite directions (Fa, Fb, Fc, Fd) and maintain them for the required duration or number of cycles.
  3. Record the cumulative lateral and longitudinal displacements of the desktop and columns (Da, Db, Dc, Dd).
- For tests 1.2.4–1.2.5 and 1.2.7–1.2.8:
  1. Place the desk on a flat surface and adjust it to the target height without locking the desk feet.
  2. Apply force at the edge most prone to tipping, within the specified distance from the outer edge, to evaluate the stability of the desk.

Fig. 4

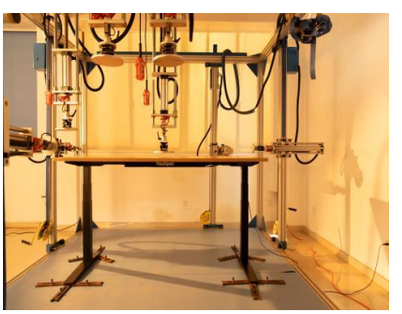

Fig. 5

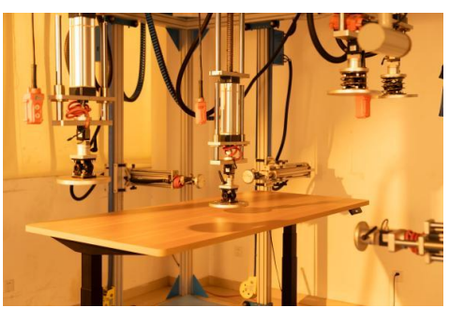

Fig. 6

Tbl. 2

Test ID & Test Name	Desk Height	Desktop Load	Applied Force	Procedure	Assessment Criteria	Test Result
EN 527-2:2016+A1:2019 1.2.1 Structural Rigidity Test	950 mm (37.4 in)	20 kg (44.1 lb)	200 N (45 lbf)	Held for 10±1 s	D1* shall be < 17 mm/m ; D2* shall be < 17 mm/m.	Pass D1 = 4.23 mm/m D2 = 5.04 mm/m
EN 527-2:2016+A1:2019 1.2.2 Horizontal Static Load Test	950 mm (37.4 in)	50 kg (110.2 lb)	500 N (112.4 lbf)	Apply the specified thrust 10 times	No structural or functional damage to the desk; no permanent deformation or failure of parts; D1, D2, D3 and D4 shall each be < 25 mm .	Pass Da = 12.25 mm Db = 11.37 mm Dc = 8.26 mm Dd = 7.53 mm
EN 527-2:2016+A1:2019 1.2.3 Additional Horizontal Static Load Test	1280 mm (50.4 in)	50 kg (110.2 lb)	500 N (112.4 lbf)	Apply the specified thrust 10 times	No structural or functional damage to the desk; no permanent deformation or failure of parts; D1, D2, D3 and D4 shall each be < 25 mm .	Pass Da = 12.34 mm Db = 12.13 mm Dc = 8.26 mm Dd = 7.81 mm
EN 527-2:2016+A1:2019 1.2.4 Vertical Static Load Test	950 mm (37.4 in)	/	1000 N (224.8 lbf)	Repeat 10 times	No structural or functional damage to the desk; no permanent deformation or failure of parts.	Pass
EN 527-2:2016+A1:2019 1.2.5 Additional Vertical Static Load Test	1280 mm (50.4 in)	/	500 N (112.4 lbf)	Repeat 10 times	No structural or functional damage to the desk; no permanent	Pass

					deformation or failure of parts.	
1.2.6 Overall Wobble Displacement	1280 mm (50.4 in)	20 kg (44.1 lb)	100 N (22.5 lbf)	Held for 10 ± 1 s	Da, Db, Dc and Dd shall each be < 3.5 mm.	Pass Da = 2.62 mm Db = 1.91 mm Dc = 2.34 mm Dd = 1.75 mm
EN 527-2:2016+A1:2019 1.2.7 Stability Test Under Vertical Load	1280 mm (50.4 in)	/	750 N (168.6 lbf)	Held for 10 ± 1 s	No structural or functional damage to the desk; no permanent deformation or failure of parts.	Pass
EN 527-2:2016+A1:2019 1.2.8 Vertical Impact Test	950 mm (37.4 in)	/	Standard impactor	Repeat 10 times	No structural or functional damage to the desk; no permanent deformation or failure of parts.	Pass
With Extra-Large Tabletop						
EN 527-2:2016+A1:2019 1.2.9 Structural Rigidity Test (2000 mm [78.7 in] Long Tabletop)	950 mm (37.4 in)	20 kg (44.1 lb)	200 N (45 lbf)	Held for 10 ± 1 s	D1* shall be < 17 mm/m; D2* shall be < 17 mm/m.	Pass D1 = 5.26 mm/m D2 = 5.15 mm/m
EN 527-2:2016+A1:2019 1.2.10 Horizontal Static Load Test (2000 mm [78.7 in] Long Tabletop)	950 mm (37.4 in)	50 kg (110.2 lb)	500 N (112.4 lbf)	Apply the specified thrust 10 times	No structural or functional damage to the desk; no permanent deformation or failure of parts; D1, D2, D3 and D4 shall each be < 25 mm (0.98 in).	Pass Da = 12.59 mm Db = 12.78 mm Dc = 8.65 mm Dd = 8.82 mm
EN 527-2:2016+A1:2019 1.2.11 Additional Horizontal Static Load Test (2000 mm [78.7 in] Long Tabletop)	1280 mm (50.4 in)	50 kg (110.2 lb)	500 N (112.4 lbf)	Apply the specified thrust 10 times	No structural or functional damage to the desk; no permanent deformation or failure of parts; D1, D2, D3 and D4 shall each be < 25 mm .	Pass Da = 12.55 mm Db = 12.63 mm Dc = 8.50 mm Dd = 8.62 mm
EN 527-2:2016+A1:2019 1.2.12 Vertical Static Load Test (2000 mm [78.7 in] Long Tabletop)	950 mm (37.4 in)	/	1000 N (224.8 lbf)	Repeat 10 times	No structural or functional damage to the desk; no permanent deformation or failure of parts.	Pass
EN 527-2:2016+A1:2019 1.2.13 Additional Vertical Static Load Test (2000 mm [78.7 in] Long Tabletop)	1280 mm (50.4 in)	/	500 N (112.4 lbf)	Repeat 10 times	No structural or functional damage to the desk; no permanent deformation or failure of parts.	Pass
1.2.14 Overall Wobble Displacement (2000 mm [78.7 in] Long Tabletop)	1280 mm (50.4 in)	20 kg (44.1 lb)	100 N (22.5 lbf)	Held for 10±1 s	Da, Db, Dc and Dd shall each be < 3.5 mm.	Pass Da = 2.88 mm Db = 2.14 mm Dc = 2.73 mm Dd = 2.36 mm
EN 527-2:2016+A1:2019 1.2.15 Stability Test Under Vertical Load (2000 mm [78.7 in] Long Tabletop)	950 mm (37.4 in)	/	750 N (168.6 lbf)	Held for 10±1 s	No structural or functional damage to the desk; no permanent deformation or failure of parts.	Pass
EN 527-2:2016+A1:2019 1.2.16 Vertical Impact Test	950 mm (37.4 in)	/	Standard impactor	Repeat 10 times	No structural or functional damage to	Pass

(2000 mm [78.7 in] Long Tabletop)					the desk; no permanent deformation or failure of parts.	

Notes:

- "Desk height" refers to the vertical distance from the top of the desktop to the floor, based on a configuration using a 25 mm (1-inch) thick tabletop.
- For test 1.2.1, D1 is defined as the cumulative displacement in the left-right direction (including Da and Db) divided by the desk height.
- For test 1.2.1, D2 is defined as the cumulative displacement including Dc and Dd divided by the desk height.

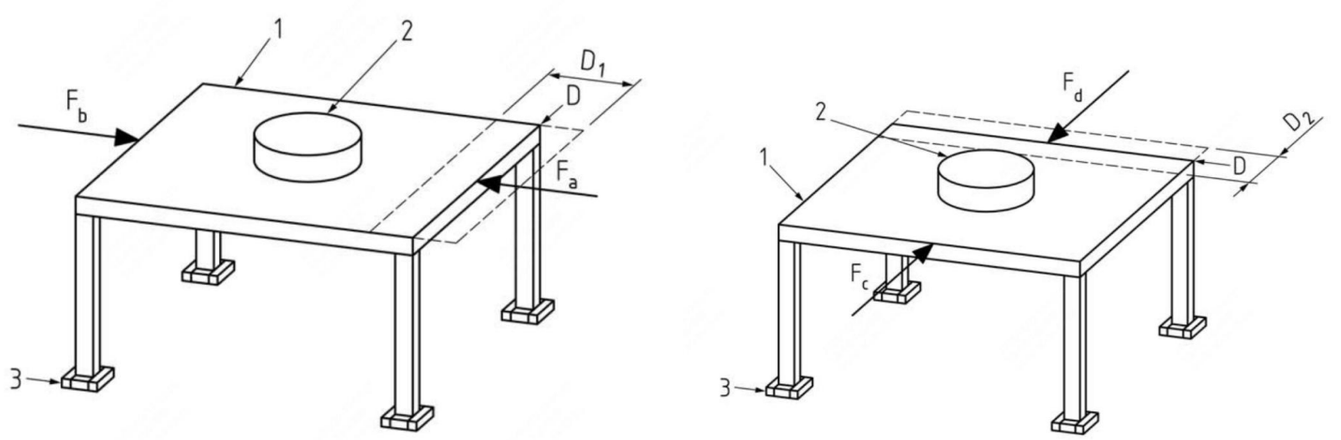

Fig. 7 Structural Rigidity Test

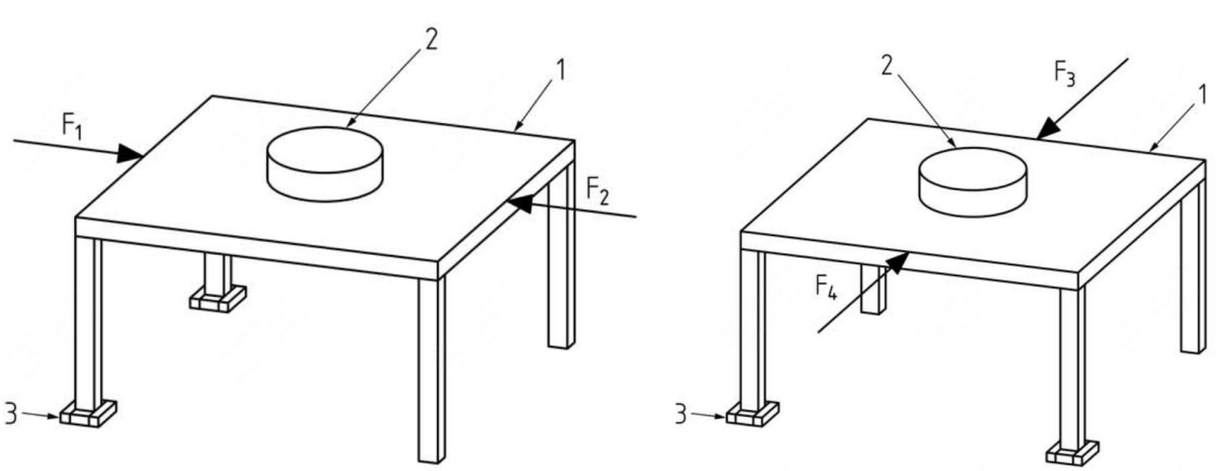

Fig. 8 Horizontal Static Load Test

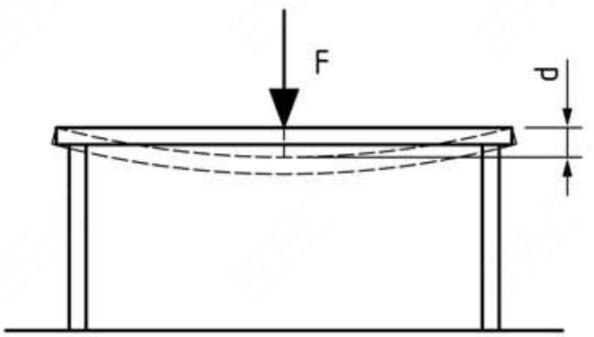

Fig. 9 Vertical Static Load Test

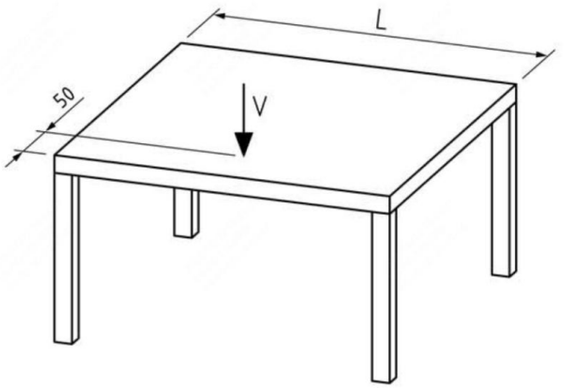

Fig. 10 Vertical Stability Test

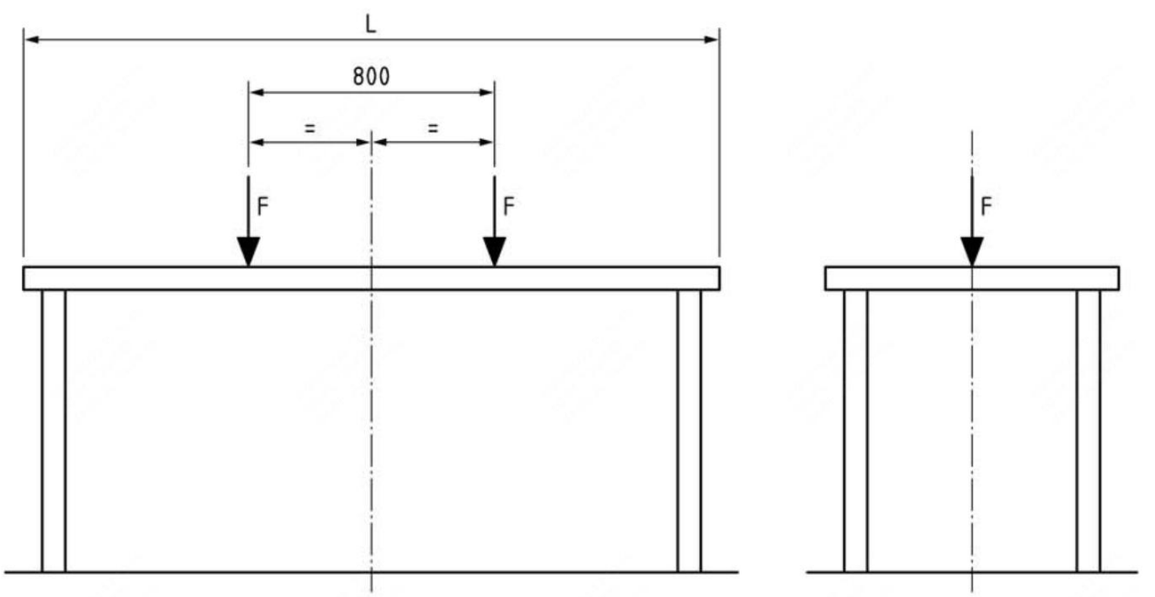

Fig. 11 Vertical Static Load Test for Tabletops over 1600 mm (63 in)

Part II. Power Performance

From the perspective of users' daily real-world usage, load capacity, noise and speed are not cold parameters; they directly determine whether a standing desk is "easy to use and built to last". Power performance testing matters because it tests these three aspects in both extreme and everyday scenarios, preventing the frustrating experience of "it looks usable, but it's annoying to use".

2.1 Dynamic and Static Load Capacity Tests

Overview: The dynamic 180 kg (396.8 lb) / static 260 kg (573.2 lb) load capacity was determined through comprehensive system-level validation rather than a single test case. Under full-load conditions, the E7 Pro desk must meet standards for operating noise level, lifting speed, full-load lifting endurance and more. Only when the entire system operates stably across all these metrics is the 180 kg (396.8 lb) rated load and lifting capacity certified as a verified value.

Tbl. 3

Test ID	Test Name	Test Result
2.1 Core Test A		
2.1.1	Desktop Load Deflection Test	✓
The following test items belong to other test categories and are referenced here as supporting evidence of normal operation under a 180 kg (396.8 lb) full load		
4.1.3	Fundamental Parameters Compliance Test III	✓
4.1.4	Fundamental Parameters Compliance Test IV	✓
2.3.1	Operational Noise Test	✓
5.1.1	Full-Load Lifting Endurance Test	✓
3.3.2	Temperature Rise Test	✓

Comprehensive Tests for Load and Lifting Capacity

Tbl. 4

Test ID	Test Name	Assessment Criteria	Reference Standard	Test Result
2.1.1	Desktop Load Deflection Test	The desktop's vertical deflection under load (X1) shall be ≤ L/100 mm, and the residual deflection after load removal (X2) shall be ≤ 5 mm (0.2 in).	EN 527-2:2016+A1:2019	Pass. Specific test data are shown in Tbl. 5.
The following test items belong to other test categories and are referenced here as supporting evidence of normal operation under a 180 kg (396.8 lb) full load.				
4.1.3	Fundamental Parameters Compliance Test III	The lifting speed was measured and calculated under no-load conditions (excluding the soft start and soft stop phases). The maximum operating speed		Pass. Specific test data are shown in Tbl. 7.

		shall remain at 50 mm/s (1.97 in/s) ± 2 mm/s (0.08 in/s).		
4.1.4	Fundamental Parameters Compliance Test IV	The lifting speed was measured and calculated under full-load conditions (excluding the soft start and soft stop phases). The maximum operating speed shall remain at 40 mm/s (1.57 in/s) ± 2 mm/s (0.08 in/s).		Pass. Specific test data are shown in Tbl. 7.
2.3.1	Maximum Operating Noise Test	Under both full-load and no-load conditions, the maximum noise level shall be < 50 dB.		Pass. Specific test data are shown in Tbl. 9.
5.1.1	Full-Load Lifting Endurance Test	Throughout the test procedure, operational noise did not exceed 50 dB, static self-locking capacity was ≥ 260 kg (573.2 lb) and no abnormal sounds or visible anomalies were observed.		Pass
3.3.2	Temperature Rise Test	1. The temperature rise of heat-generating components meets specification requirements. 2. Normal operation under the 2 min/18 min duty cycle, without thermal shutdown or similar phenomena.	IEC 60335-1	Pass

Note: All load conditions in this test report include the weight of the desktop itself.

2.1.1 CORE TEST A

Test Objective

To simulate concentrated load scenarios encountered in daily use, such as pressure applied at the desk edge (e.g., pressure from the elbow). This test verifies the structural rigidity and elastic recovery of the desktop by analysing the average of multiple test results. It ensures that frequent local loading does not cause noticeable deflection or permanent deformation, thereby verifying stability, comfort and durability over long-term use.

Reference Standard: EN 527-2:2016+A1:2019

Test Method

1. The desk is adjusted to a height of 950 mm (37.4 in).
2. As shown in Fig. 12, a vertical force of 1000 N (224.8 lbf) is applied to the desktop.
3. The load is held for 30 seconds to 1 minute.

4. The deformation under load is measured and recorded as X1 (average of multiple tests).
5. The force is removed to allow elastic recovery of the desk frame.
6. The residual deformation is measured and recorded as X2 (average of multiple tests).

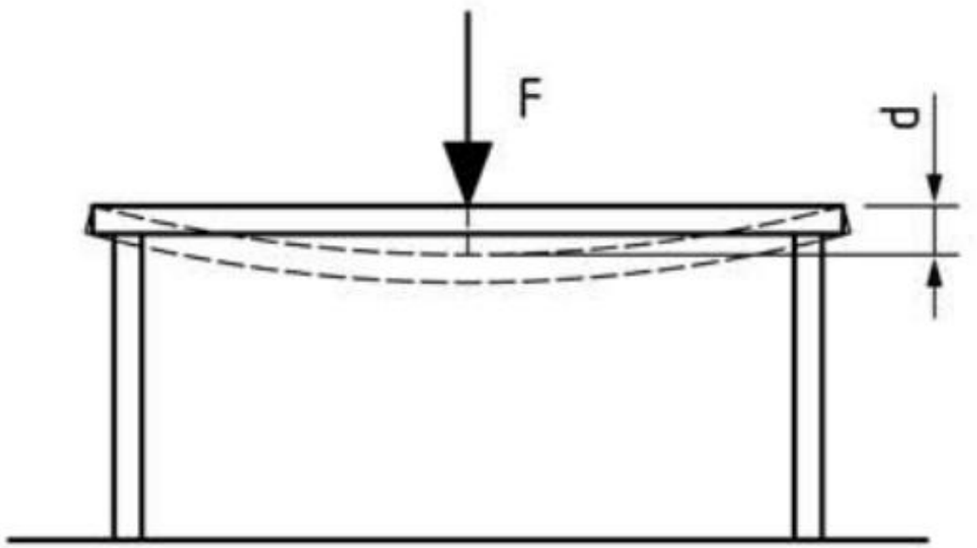

Fig. 12

Tbl. 5

Parameter	Test Method	Assessment Criteria	Test Result
X1 (Deformation Under Load)	A vertical force of 1000 N (224.8 lbf) was applied to the desktop.	X1 ≤ L/100 (mm) L = short side dimension of the desktop	5.7 mm
X2 (Residual Deformation)	A vertical force of 1000 N (224.8 lbf) was applied, held for 30 s–1 min and measured after the force was removed.	X2 ≤ 5 (mm)	0.21 mm

2.2 Operating Speed

Overview: This test evaluates the operating speed performance of the E7 Pro standing desk in actual use. It assesses the lifting speed and smoothness of the desk under simulated office desk load conditions. Tests were performed under three conditions: unloaded, 130 kg (286.6 lb) and 180 kg (396.8 lb) (full load).

Tbl. 6

Test ID	Test Name	Test Method	Assessment Criteria	Test Result
4.1.3	Fundamental Parameters Compliance Test III	The lifting speed was measured and calculated under no-load conditions (excluding the soft start and soft stop phases).	The maximum lifting speed shall remain at 50 mm/s ± 2 mm/s.	Pass. Specific test data are shown in Tbl. 7.

4.1.4	Fundamental Parameters Compliance Test IV	The lifting speed was measured and calculated under full-load conditions (excluding the soft start and soft stop phases).	The maximum lifting speed shall remain at 40 mm/s ± 2 mm/s.	Pass. Specific test data are shown in Tbl. 7.

Tbl. 7

Sample	No-Load Lifting Speed (mm/s)	No-Load Lowering Speed (mm/s)	130 kg Load Lifting Speed (mm/s)	130 kg Load Lowering Speed (mm/s)	Full-Load Lifting Speed (mm/s)	Full-Load Lowering Speed (mm/s)
Sample 1	51.46	51.37	40.44	51.43	40.42	51.59
Sample 1	50.46	50	40.41	51.21	40.41	51.32
Sample 1	51.37	50.85	41.02	50.93	40.46	51.50
Sample 2	50	51.02	41.45	51.22	41.21	51.33
Sample 2	51.11	50.25	40.52	50.98	40.32	51.59
Sample 2	50.59	51.37	41.32	51.63	40.96	51.63
Sample 3	51.29	50.85	40.24	51.18	40.23	51.99
Sample 3	50.85	50.25	41.32	50.76	40.32	50.86
Sample 3	51.96	50.51	40.58	50.85	40.52	50.85

2.3 Noise Level

Overview: This test evaluates the acoustic performance of the E7 Pro standing desk in actual use. Conducted in a controlled environment in accordance with ISO 3745:2012, it measures the noise of the desk at different heights, under different load conditions and during continuous lifting cycles, ensuring smooth, low-disturbance operation under high load and extended use.

Tbl. 8

Test ID	Test Name	Reference Standard	Test Method	Assessment Criteria	Test Result
2.3.1	Noise Test	ISO 3745:2012	1. As shown in Fig. 13, the sound level meter was placed 500 mm (19.7 in) from the centre of the desktop (outward from the vertical centreline and parallel to the desktop surface). 2. The maximum noise level was recorded during the lifting and lowering phases.	Maximum noise < 50 dB	Pass. Specific test data are shown in Tbl. 9.
2.3.2	Abnormal Operating Noise Test	ISO 3745:2012	As shown in Tbl. 10, operating modes were evaluated under both no-load and full-load conditions.	No abnormal noise	Pass. Specific test data are shown in Tbl. 10.

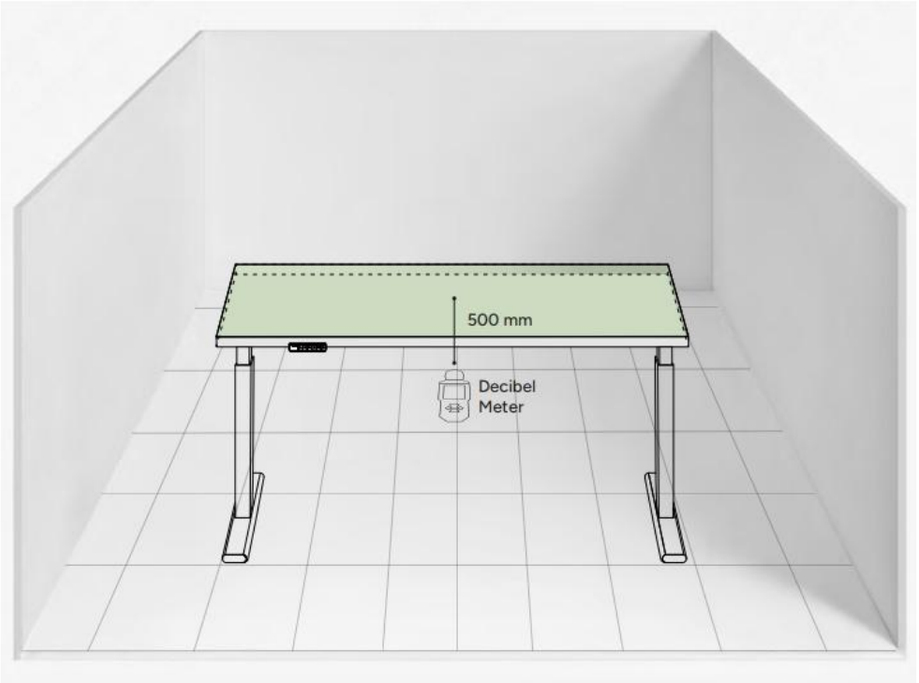

Fig. 13

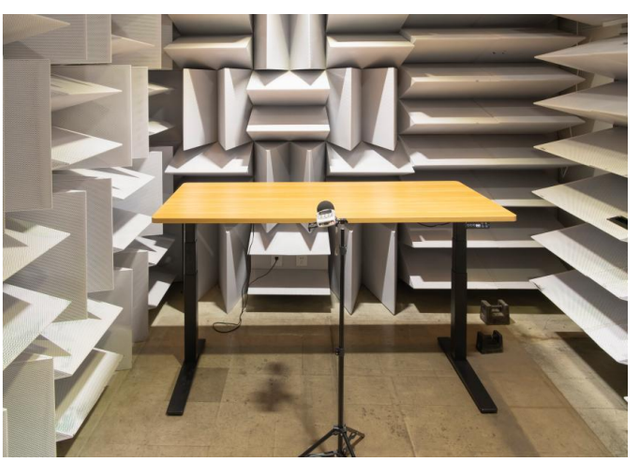

Fig. 14

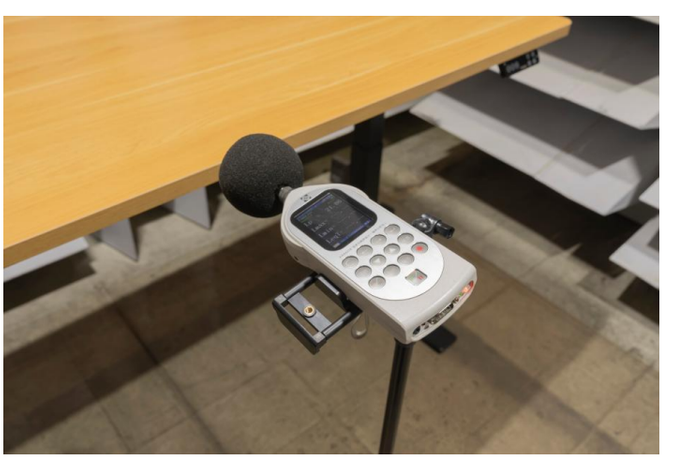

Fig. 15

Tbl. 9

Sample	No-Load Rise (dB)	No-Load Lower (dB)	130 kg (286.6 lb) Load Rise (dB)	130 kg (286.6 lb) Load Lower (dB)	Full-Load Rise (dB)	Full-Load Lower (dB)
Sample 1	46	40	47	42	46	42
Sample 1	46	42	47	41	47	40
Sample 1	47	41	46	42	47	42
Sample 2	47	41	46	41	46	41
Sample 2	45	42	45	40	47	40
Sample 2	46	41	46	42	46	41
Sample 3	47	40	46	42	46	40
Sample 3	47	42	47	41	47	41
Sample 3	47	40	46	41	46	40

Tbl. 10

Operating Mode	No Abnormal Noise	No Friction Noise	No Motor Vibration or Impact	No Leg Shaking
Continuous lifting/lowering across the full range	PASS	PASS	PASS	PASS
Frequent switching between lifting and lowering	PASS	PASS	PASS	PASS
Continuous lifting to maximum height	PASS	PASS	PASS	PASS
Continuous lowering to minimum height	PASS	PASS	PASS	PASS

Part III. Safety Assurance

In the safety system of a standing desk, "no accidents" is only the baseline; "no worries" is the standard. We integrate a sense of security into the underlying logic of every lifting movement, building an always-on active protection system that covers every scenario through a triple line of defence: obstacle-triggered reversal, self-locking force and electrical safety. This triple protection system is not designed only for extreme accidents, but to let you set aside any concern about "losing control" in every daily lift. We strive to make safety an invisible foundation, so that you can focus entirely on your work and thinking.

3.1 Obstacle-Detection and Anti-Collision Performance

In standing desk safety protection, a "single sensor" often means "blind spots". To make obstacle-triggered reversal sensitive enough without being "neurotic", we abandoned traditional pure-current or pure-mechanical-switch solutions and adopted dual-mode fusion detection technology that combines a high-precision gyroscope with high-dynamic current sensing. This is not merely stacking sensors; it is a dual interpretation of physical deformation and dynamic load.

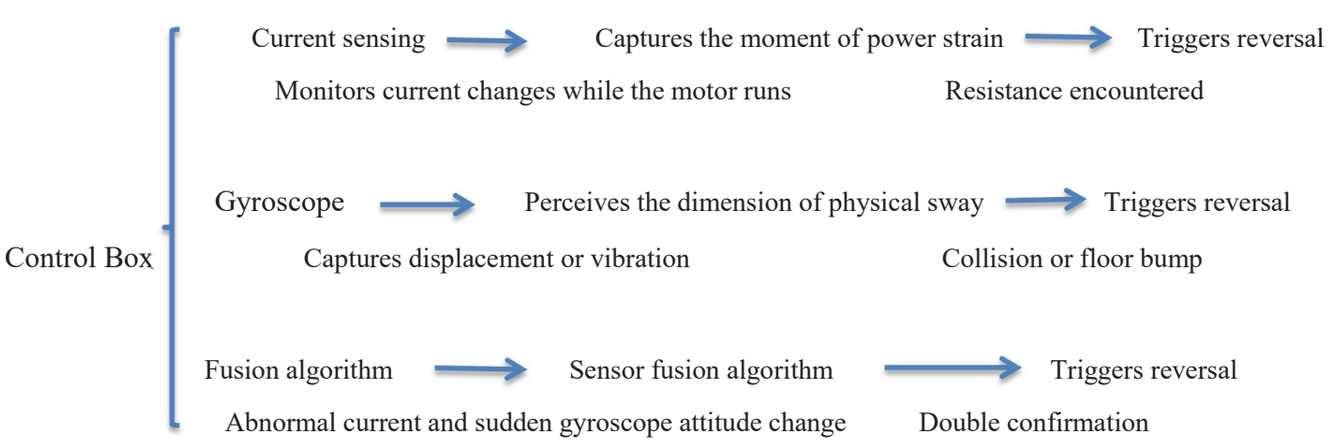

Tbl. 11

Test ID	Test Name	Test Result
3.1 Core Test A		
3.1.1	Obstacle Detection and Rebound Function Verification Test I	Pass
3.1.2	Obstacle Detection and Rebound Function Verification Test II	Pass
3.1 Core Test B		
3.1.3	Upward Obstacle Detection Verification Test	Pass
3.1.4	Downward Obstacle Detection Verification Test (Rigid Obstacle)	Pass
3.1.5	Downward Obstacle Detection Verification Test (Semi-Rigid Obstacle 1)	Pass
3.1.6	Downward Obstacle Detection Verification Test	Pass

	(Semi-Rigid Obstacle 2)	
3.1.7	Downward Obstacle Detection Verification Test (Low-Stiffness Obstacle)	Pass

CORE TEST A

Test Objective

Verify the effectiveness, response threshold and reversal reliability of the collision detection mechanism. Tiered response: sensitivity is defined according to the severity of the obstruction (current peak + tilt angle variation). This test evaluates the ability of the control system's active protection layer to detect obstacles. The goal is to confirm that the system can accurately identify resistance and execute the correct reversal protocol, ensuring stable, consistent and predictable safety performance across different configurations and usage scenarios.

Test Method

Using a force measurement device with a built-in elastic coefficient of 500±50 N/mm (2855±286 lbf/in) and a force surface of φ80±5 mm (3.15±0.2 in), upward probe-hit tests and downward obstacle-contact tests were performed at the desktop centre, long edge and short edge under no load and 1.1× rated load. Force curves were collected at ≥100 Hz and judged in segments of 400/150/100 N (89.9/33.7/22.5 lbf).

Tbl. 12

Test ID	Test Standard	Test Method	Desktop Movement Direction	Highest Sensitivity	Lowest Sensitivity
3.1.1	IEC 60335-2-116:2019	Using a force measurement device with a built-in elastic coefficient of 500±50 N/mm (2855±286 lbf/in) and a force surface of φ80±5 mm (3.15±0.2 in), upward probe-hit tests were performed at the desktop centre, long edge and short edge under no load and 1.1× rated load. Force curves were collected at ≥100 Hz and judged in segments of 400/150/100 N (89.9/33.7/22.5 lbf).	Up	Pass	Pass
3.1.2	IEC 60335-2-116:2019	Using a force measurement device with a built-in elastic coefficient of 500±50 N/mm (2855±286 lbf/in) and a force surface of φ80±5 mm (3.15±0.2 in), downward obstacle-contact tests were performed at the	Down	Pass	Pass

		desktop centre, long edge and short edge under no load and 1.1× rated load. Force curves were collected at ≥100 Hz and judged in segments of 400/150/100 N (89.9/33.7/22.5 lbf).			

CORE TEST B

Test Objective

By introducing obstacles of different types and stiffness (rigid, semi-rigid and low-stiffness items), verify the obstacle detection sensitivity, the timeliness of the reversal response and the correctness of its direction during both upward and downward movement. This test ensures that, in real-world scenarios, the desk can detect unexpected contact, stop safely and rebound, minimising the risk of pinching or property damage and thereby providing users with a reliable and predictable safety experience.

Test Method

- Sensitivity settings: the anti-collision sensitivity is adjustable across 3 levels (1–3), with level 3 being the most sensitive. All tests in this section were performed at level 2 (the default setting).
- Rigid obstacle: a rigid cabinet positioned to block movement under the desk.
- Semi-rigid obstacle 1: the two armrests of an office chair placed under the desk to obstruct movement.
- Semi-rigid obstacle 2: the backrest of an office chair placed under the desk to obstruct movement.
- Low-stiffness obstacle: an empty plastic water bottle placed under the desk to obstruct movement, simulating soft materials such as a human hand.

Tbl. 13

Test ID	Movement Direction	Obstacle Type	Assessment Criteria	Measured Reversal Rate	Test Result
3.1.3	Up	Fixed obstacle above the desk (e.g., shelf or panel)	Reversal rate ≥ 90%	100%	Pass
3.1.4	Down	Rigid obstacle (e.g., cabinet)	Reversal rate ≥ 90%	100%	Pass
3.1.5	Down	Two chair armrests	Reversal rate ≥ 80%	80%	Pass
3.1.6	Down	Backrest	Reversal rate ≥ 80%	80%	Pass
3.1.7	Down	Empty water bottle	Reversal rate ≥ 80%	90%	Pass

3.2 Self-Locking Function

Overview: The desk's self-protection capability under abnormal operating conditions was evaluated, including static self-locking force and gyroscope tilt protection. Static self-locking: the mechanism was evaluated to ensure that, during a power outage or under an external vertical force, the desktop remains stationary without descending, thereby maintaining height stability. Tilt protection: the gyroscope function was verified to ensure that the system can detect obvious tilt caused by an uneven load or uneven floor and trigger a protective stop to prevent tipping over. These evaluations aim to verify that the lifting system remains controllable in daily use and operates within safe parameters.

Tbl. 14

Test ID	Test Name	Test Result
3.2 Core Test A		
3.2.1	Static Fail-Safe Position Holding Test	Pass
Other Tests		
3.2.2	Gyroscope Tilt Angle Verification Test	Pass

CORE TEST A

Test Objective

Through static self-locking force and one-sided self-locking force tests, verify the self-locking reliability of the standing desk under various operating states. The purpose is to ensure that the structure remains stable at the target height under load and uneven stress distribution, preventing accidental descent or one-sided instability, thereby ensuring user safety and long-term stability.

Reference Standard: Corporate Test Protocol

Test Method

The test was performed on a complete desk assembly that had previously completed 14,000 full-load lifting cycles. The desk was left static and powered for 72 hours, and the displacement was measured.

Tbl. 15

Test ID	Test Prerequisite	Test Indicator	Load	Operating State	Procedure	Assessment Criteria	Test Result
3.2.1	The test was performed on a complete desk assembly that had previously completed 14,000 full-load lifting cycles.	Static self-locking force	Uniform load of 260 kg (573.2 lb)	Power-Off, static	Measure descent after 72 h of static rest	Displacement < 1 mm (0.039 in)	Pass

	The test was performed on a complete desk assembly that had previously completed 14,000 full-load lifting cycles.	One-sided self-locking force	Uniform load of 130 kg (286.6 lb) applied to 1/2 of the desktop area	Power-Off, static	Measure descent after 72 h of static rest	Displacement < 1 mm (0.039 in)	Pass

Static Self-Locking Force: 260 kg (573.2 lb) placed uniformly

At placement

Fig. 16

After 72 h of static rest

Fig. 17

One-Sided Self-Locking Force: 130 kg (286.6 lb) load placed on one side

At placement

Fig. 18

After 72 h of static rest

Fig. 19

Other Tests

Test Objective

Verify the gyroscope in the desk control box, which senses small tilt angles or angular velocity changes during lifting, thereby triggering safety logic such as anti-collision, anti-pinching and obstacle-triggered reversal. This is not a static tilt test; it addresses safety issues during dynamic lifting.

Reference Standard: Corporate Test Protocol

Test Method

The standing desk structure was mechanically tilted to different angles, and the detection capability and false-trigger behaviour of the control box were verified under all sensitivity settings.

Tbl. 16

Test ID	Test Name	Test Objective	Test Method	Assessment Criteria	Test Result
3.2.2	Gyroscope Tilt Angle Verification Test	Verify the tilt protection sensitivity settings, ensuring that the system detects excessive tilt and triggers a protective stop to prevent tipping over.	The standing desk structure was mechanically tilted to different angles; under all sensitivity settings, the detection capability and false-trigger behaviour of the control box were verified.	The control unit triggers a protective stop 100% of the time when the tilt angle is > 1.0°.	Pass

3.3 Electrical Control Safety

Overview: To ensure the safety of the equipment's electrical controls, this module tests the product's controller.

Tbl. 17

Test ID	Test Name	Test Result
3.3 Core Test A		
3.3.1	Dielectric Strength Test	Pass
3.3.2	Temperature Rise Test	Pass
3.3.3	Electrostatic Discharge	Pass

CORE TEST A

Dielectric Strength Test

Test Objective

A core test item. A voltage higher than the rated working voltage is applied between live parts and the enclosure/earth to verify that the insulation does not break down and that the leakage current does not exceed the limit, checking for insulation cracking, moisture absorption and material defects to prevent electric shock and fire.

Reference Standard: IEC 60335-1

Test Method

A dielectric strength tester is used to apply high voltage (1800 V, 10 mA) to the product for 1 minute.

Tbl. 18

Test ID	Test Standard	Test Item	Test Requirements	Acceptance Criteria	Conclusion
3.3.1	IEC 60335-1	Dielectric Strength Test	1. Test conditions: dielectric strength 1800 V, current 10 mA. 2. Apply high voltage to the product for 1 minute using a dielectric strength tester.	Pass if the high-voltage tester does not alarm, the measured value is less than 10 mA and there is no excessive leakage.	Pass

Fig. 20

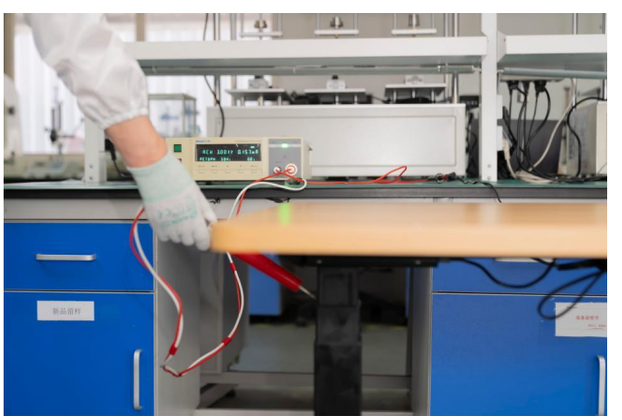

Fig. 21

Temperature Rise Test (Including Duty-Cycle Operating Effectiveness)

Test Objective

Evaluate the temperature changes of electrical or electronic products during operation, to ensure their safety, reliability and compliance with standard requirements.

Reference Standard: IEC 60335-1

Test Method

The constant-temperature chamber was preset to 40°C (104°F). After stabilisation, the instrumented control box was placed inside, and the product was run at full load on a duty cycle of 2 minutes of continuous operation followed by 18 minutes of rest, until the temperature reached equilibrium. The maximum temperature of key components was recorded using a multi-channel temperature meter.

Tbl. 19

Test ID	Test Standard	Test Item	Test Requirements	Acceptance Criteria	Conclusion
3.3.2	IEC 60335-1	Temperature Rise Test	1. No functional anomalies in the test sample. 2. No functional anomalies in the supporting test sample. 3. Disconnect the motor cable or physically fix the motor to perform a locked-rotor test. Continue applying power and measure the peak temperature rise of the power components before the control box detects the abnormal current and cuts off power.	1. The temperature rise of heat-generating components meets specification requirements. 2. Normal operation under the 2 min/18 min duty cycle, without thermal shutdown or similar phenomena.	Pass

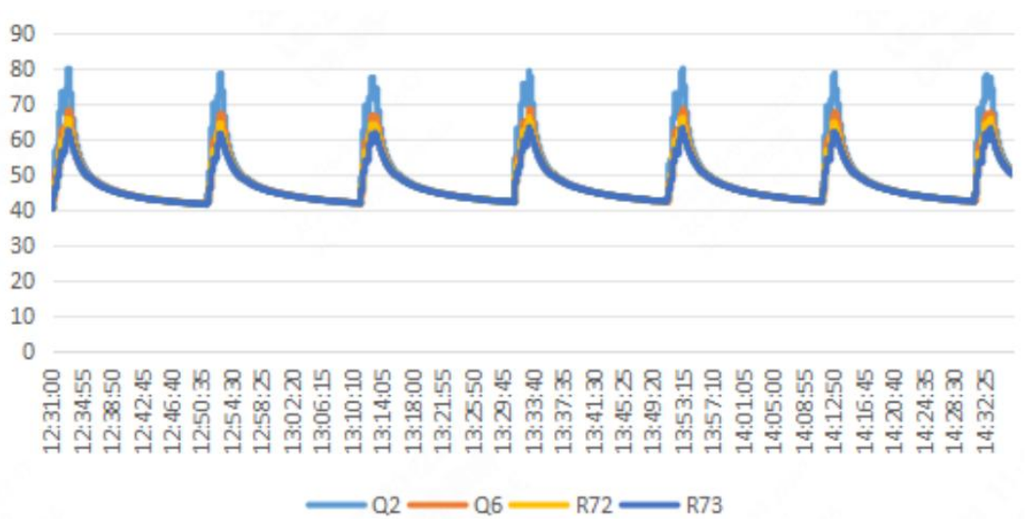

Fig. 22

Electrostatic Discharge

Test Objective

Evaluate the immunity of electronic components or devices to electrostatic interference, thereby improving product reliability and stability.

Reference Standard: IEC 61000-4-2

Test Method

Contact discharges of ±4 kV and air discharges of ±8 kV were applied, using the corresponding test heads, to sensitive areas such as the product's connector interfaces, screw holes and the gaps between the upper and lower shells. Positive voltage was applied 10 times and negative voltage 10 times to the dischargeable parts of the test sample. The ESD test was performed while the product was operating.

Tbl. 20

Test ID	Test Standard	Test Item	Test Requirements	Acceptance Criteria	Conclusion
3.3.3	IEC 61000-4-2	Electrostatic Discharge	Air discharge ±8 kV, contact discharge ±4 kV	1. No functional anomalies in the test sample. 2. No functional anomalies in the supporting test sample.	Pass

Fig. 23

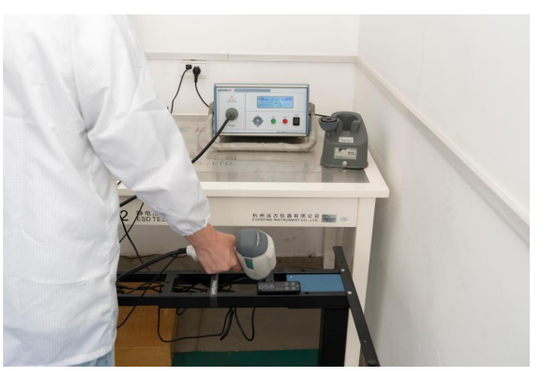

Fig. 24

3.4 Material Safety

Overview: To comprehensively verify the safety and compliance of materials in actual usage scenarios, this module carried out specific material safety tests on the frame and tabletop components. All tests were performed by qualified third-party laboratories. The certification bodies and test standards were selected according to the specific material characteristics and potential risks of each component. This systematic, multi-dimensional independent testing confirms the product's safety for users' health and the home.

Tbl. 21

Component	Certification	Certification Reference
Desk frame material	REACH	Certificate in appendix
Desk frame material	RoHS	Certificate in appendix
Tabletop	Material Test Report	Certificate in appendix

Part IV. Control Precision

A truly flagship standing desk needs precise control, smooth movement and the ability to report errors. We integrate industrial-grade precision control logic into everyday office scenarios, building a predictable and dependable intelligent power system across three dimensions: parameter precision, operating smoothness and accurate error reporting. Millimetre-level parameter precision removes guesswork and returns the desk to exactly the same height every time; linear, smooth movement eliminates stop-and-go jerking; and precise error reporting and diagnosis go beyond simply stopping: the system understands what went wrong. The core of safety and maintenance lies in knowing the cause. Our system has full-chain status detection capability: it not only detects obstacles through current and gyroscope fusion to trigger reversal, but also performs millisecond-level diagnosis of abnormal conditions such as overcurrent, overvoltage, undervoltage, overheating and motor stalling. Rather than simply freezing or behaving erratically, the desk "speaks" through error codes, helping users or after-sales service quickly locate the problem and turning passive repair into active protection.

4.1 Parameter Accuracy Verification

Overview: The operational accuracy test verifies the control system's response to user commands, ensuring accuracy, stability and predictability.

- Compliance verification: verifies compliance with fundamental parameters (including height range, travel, full-load/no-load speed and voltage compatibility), while evaluating the repeatability of memory presets and the smoothness of movement.
- Control logic evaluation: verifies specific control mechanisms, including manual-control interaction (jog and continuous movement), acceleration curves (soft start/stop) and retention of memory settings during power interruption or sleep-mode transitions.
- System resilience: simulates irregular operating scenarios through extensive port hot-plugging and control-box sleep logic tests. This ensures system stability under complex power conditions and prevents loss of settings.
- Performance consistency: confirms that functional performance remains consistent during long-term use and that height adjustment strictly follows input commands.

Tbl. 22

Test ID	Test Name	Test Result
4.1 Core Test A		
4.1.1	Fundamental Parameters Compliance Test I	Pass
4.1.2	Fundamental Parameters Compliance Test II	Pass
4.1.3	Fundamental Parameters Compliance Test III	Pass
4.1.4	Fundamental Parameters Compliance Test IV	Pass
4.1.5	Power Supply Voltage Test	Pass
4.1.6	Minimum Height Verification Test	Pass
4.1.7	Maximum Height Verification Test	Pass

4.1.8	Hand Control Jog Function Test	Pass
4.1.9	Hand Control Continuous Operation Test	Pass
4.1 Core Test B		
4.1.10	Sleep Mode Position Memory Retention Test I	Pass
4.1.11	Max/Min Height Limit Memory Retention After Power Loss Test	Pass
4.1.12	Menu Settings Memory Retention After Power Loss Test	Pass
4.1 Core Test C		
4.1.13	Interface Hot-Plug Reliability Test I	Pass
4.1.14	Interface Hot-Plug Reliability Test II	Pass
4.1.15	Interface Hot-Plug Reliability Test III	Pass
4.1.16	Interface Hot-Plug Reliability Test IV	Pass
4.1.17	Interface Hot-Plug Reliability Test V	Pass
4.1.18	Interface Hot-Plug Reliability Test VI	Pass
4.1.19	Interface Hot-Plug Reliability Test VII	Pass
4.1.20	Interface Hot-Plug Reliability Test VIII	Pass
4.1.21	Interface Hot-Plug Reliability Test IX	Pass
4.1.22	Interface Hot-Plug Reliability Test X	Pass
4.1.23	Interface Hot-Plug Reliability Test XI	Pass
4.1.24	Interface Hot-Plug Reliability Test XII	Pass
4.1.25	Interface Hot-Plug Reliability Test XIII	Pass
4.1.26	Interface Hot-Plug Reliability Test XIV	Pass
4.1.27	Interface Hot-Plug Reliability Test XV	Pass
Other Tests		
4.1.28	Hand Control Position Programming and Reset Verification Test	Pass
4.1.29	Memory Button Quantity Verification Test	Pass
4.1.30	Position Memory Function Verification Test	Pass
4.1.31	Multiple Memory Settings Function Test	Pass
4.1.32	Soft Start and Soft Stop Motion Test	Pass
4.1.33	Hand Control Sleep Timer Test	Pass
4.1.34	Hand Control Wake-Up Test	Pass
4.1.35	Hand Control Device Charging Test	Pass

CORE TEST A

Test Objective

The Fundamental Parameters Compliance Test verifies key electrical parameters, lifting travel and height measurements under rated power supply and full-load conditions. This assessment ensures that the control system, motor assembly and mechanical structure operate stably within the specified range, providing accurate data and a predictable response. This verification lays the foundation for functional reliability and subsequent performance tests.

Reference Standard: Corporate Test Protocol

Test Method: refer to Tbl. 23

Tbl. 23

Test ID	Test Name	Test Method	Assessment Criteria	Test Result
4.1.1	Fundamental Parameters Compliance Test I	Measurements were taken at the lowest and highest height positions of the desk respectively.	The deviation between the actual height and the value displayed on the hand control shall be within 5 mm (0.2 in).	Pass. Specific test data are shown in Tbl. 24.
4.1.2	Fundamental Parameters Compliance Test II	The total lifting travel of the desk was measured and calculated based on the lowest and highest positions. The height range shall be 630–1280 mm (24.8–50.4 in), with a total travel of 650 mm (25.6 in).	The deviation between the actual value and the calculated value shall be within 5 mm (0.2 in).	Pass. Specific test data are shown in Tbl. 24.
4.1.3	Fundamental Parameters Compliance Test III	The no-load lifting speed (excluding the soft start and soft stop phases) was measured and calculated separately.	Maximum lifting speed 50 mm/s (1.97 in/s) ± 2 mm/s (0.08 in/s)	Pass. Specific test data are shown in Tbl. 7.
4.1.4	Fundamental Parameters Compliance Test IV	The full-load lifting speed (excluding the soft start and soft stop phases) was measured and calculated separately.	Maximum lifting speed 40 mm/s (1.57 in/s) ± 2 mm/s (0.08 in/s)	Pass. Specific test data are shown in Tbl. 7.
4.1.5	Power Supply Voltage Test	The control box is operated in a 90 V low-voltage environment to verify its function.	The desk functions normally.	Pass
4.1.6	Minimum Height Verification Test	1. The desk is adjusted to a reference height of 630 mm (24.8 in). 2. The hand control unit displays metric mode. 3. The height is verified using a tape measure.	The deviation between the actual measured height and the displayed height shall be < 5 mm (0.2 in).	Pass
4.1.7	Maximum Height Verification Test	1. The desk is adjusted to a reference height of 1280 mm (50.4 in). 2. The hand control unit displays metric mode. 3. The height is verified using a tape measure.	The deviation between the actual measured height and the displayed height shall be < 5 mm (0.2 in).	Pass
4.1.8	Hand Control Jog Function Test	1. Single tap on the up key; single tap on the down key. 2. Multiple consecutive taps on the up key; multiple consecutive taps on the down key. 3. Multiple consecutive alternating taps on the up and down keys. 4. Repeat the above steps 10 times.	Deviation < 5 mm (0.2 in)	Pass
4.1.9	Hand Control Continuous Operation Test	Press and hold for a long time, and observe whether	Deviation < 5 mm (0.2 in)	Pass

		the actual height matches the displayed height during lifting.		

Tbl. 24

Sample	Minimum Height (mm)	Maximum Height (mm)	Travel (mm)
Sample 1	632	1282	650
Sample 1	633	1283	650
Sample 1	632	1284	652
Sample 2	634	1285	651
Sample 2	633	1286	653
Sample 2	635	1285	650
Sample 3	631	1282	651
Sample 3	632	1282	650
Sample 3	631	1281	650

Note: All heights in this test report exclude the thickness of the desktop itself.

CORE TEST B

Test Objective

Verify the parameter retention capability of the standing desk's hand control under different operating states, including sleep mode, power disconnection and re-powering. The test aims to confirm whether position memory settings and high/low limit parameters are correctly saved and restored. By simulating power-off and standby scenarios, it evaluates whether state transitions cause data loss, corruption or anomalies, ensuring that preset height positions can be accurately restored without reconfiguration.

Reference Standard: Corporate Test Protocol

Test Method

Power-off and standby scenarios were simulated.

Tbl. 25

Test ID	Test Name	Test Condition	Parameter	Assessment Criteria	Test Result
4.1.10	Sleep Mode Position Memory Retention Test	Sleep mode (24 h)	Preset memory	Preset parameters remain unchanged	Pass
4.1.11	Position Memory Retention After Power	Power disconnected (wait 24 h)	Preset memory	Preset parameters remain unchanged	Pass

	Loss Test				
4.1.12	Max/Min Height Memory Retention After Power Loss Test	Power disconnected (wait 24 h)	Up/down height limits	Preset parameters remain unchanged	Pass
4.1.13	Menu Settings Memory Retention After Power Loss Test	Power disconnected (wait 24 h)	Preset memory	Preset parameters remain unchanged	Pass

CORE TEST C

Test Objective

Verify the operational integrity of the control system when the cable connecting the hand control and the control box is disconnected. This test evaluates the system's response to cable disconnection at different voltage levels and in different operating states, to ensure that the control system maintains normal operation.

Reference Standard: Corporate Test Protocol

Test Method

The product's operating state was tested at different input voltages, with each test repeated 50 times.

Tbl. 26

Test ID	Power Type	Voltage (V)	Operating State	Assessment Criteria	Cycles	Test Result
4.1.14	AC	90	Idle state	The control box functions normally after the test	50	Pass
4.1.15	AC	90	Reset state	The control box functions normally after the test	50	Pass
4.1.16	AC	90	Lifting state	The control box functions normally after the test	50	Pass
4.1.17	AC	90	Lowering state	The control box functions normally after the test	50	Pass
4.1.18	AC	90	Memory key 1 operation	The control box functions normally after the test	50	Pass
4.1.19	AC	90	Memory key 2 operation	The control box functions normally after the test	50	Pass
4.1.20	AC	90	Memory key 3 operation	The control box functions normally after the test	50	Pass
4.1.21	AC	240	Idle state	The control box functions normally after the test	50	Pass
4.1.22	AC	240	Reset state	The control box functions normally after the test	50	Pass
4.1.23	AC	240	Lifting state	The control box functions normally	50	Pass

				after the test		
4.1.24	AC	240	Lowering state	The control box functions normally after the test	50	Pass
4.1.25	AC	240	Memory key 1 operation	The control box functions normally after the test	50	Pass
4.1.26	AC	240	Memory key 2 operation	The control box functions normally after the test	50	Pass
4.1.27	AC	240	Memory key 3 operation	The control box functions normally after the test	50	Pass

Other Tests

Tbl. 27

Test ID	Test Name	Test Objective	Test Method	Assessment Criteria	Test Result
4.1.28	Hand Control Position Programming and Reset Verification Test	Verify routine hand control functions	Perform operations according to the hand control function requirements	Functions operate normally	Pass
4.1.29	Hand Control Memory Key Quantity Verification Test	Verify routine hand control functions	Perform operations according to the hand control function requirements	Functions operate normally	Pass
4.1.30	Hand Control Memory Key Function Verification Test	Verify routine hand control functions	Perform operations according to the hand control function requirements	Functions operate normally	Pass
4.1.31	Multiple Memory Settings Function Test	Verify routine hand control functions	Perform operations according to the hand control function requirements	Functions operate normally	Pass
4.1.32	Soft Start & Soft Stop Motion Test	Verify routine hand control functions	Manually operate the standing desk and check whether there is a deceleration process at start and stop	Functions operate normally	Pass
4.1.33	Hand Control Sleep Timer Test	Verify the energy-saving function of the control box	Start timing immediately after operation stops, to measure the time before the keypad display turns off	The display turns off within 10 seconds	Pass
4.1.34	Hand Control Wake-Up Test	Verify routine hand control functions	After the device screen turns off, press any key	Pressing any key wakes the display	Pass
4.1.35	Hand Control Device Charging Test	Verify routine hand control functions	Charge phones of various brands, and check whether each phone charges normally while the device is operating	Functions operate normally	Pass

4.2 Smooth and Stable Lifting

Overview: This test verifies multi-motor synchronisation performance, ensuring a consistent height during lifting.

Tbl. 28

Test ID	Test Name	Test Objective	Test Method	Assessment Criteria	Test Result
4.2.1	Multi-Motor Synchronisation Test	Ensure that the desktop remains level during the height adjustment process.	The synchronisation of the legs during operation was checked, and the levelness was measured.	Levelness measured by the test equipment < 0.7°	Pass

Fig. 25

Overview: This test verifies that, in normal operating modes, the desk lifts smoothly, steadily and without anomalies.

Tbl. 29

Test ID	Operating Mode	No Abnormal Noise	No Friction Noise	No Motor Vibration or Impact	No Leg Shaking
4.2.2	Continuous lifting and lowering	PASS	PASS	PASS	PASS
4.2.3	Repeated switching between rising and lowering	PASS	PASS	PASS	PASS
4.2.4	Continuous lifting to maximum height	PASS	PASS	PASS	PASS
4.2.5	Continuous lowering to minimum height	PASS	PASS	PASS	PASS

4.3 Error Codes and Troubleshooting

Tbl. 30 (Two-Motor Linked Product)

Fault Code	Error Code Description	How to Handle
E01	Continuous operation time too long	If the desk has been used for too long, rest it for 18 minutes before using it again.
E02	Over-temperature fault	If the temperature is too high, rest the desk for 18 minutes and use it again once the temperature drops.
E03	Motor 1 overcurrent	Confirm that the desktop load does not exceed the rated load. If it does, reduce the load and run the desk again.
E04	Motor 2 overcurrent	Confirm that the desktop load does not exceed the rated load. If it does, reduce the load and run the desk again.
E07	Motor 1 single Hall fault	1. Check whether the motor cable is properly connected to the control box, reinsert it firmly, then press and hold the "▼" down key to reset. 2. Replace the motor or control box.
E08	Motor 2 single Hall fault	1. Check whether the motor cable is properly connected to the control box, reinsert it firmly, then press and hold the "▼" down key to reset. 2. Replace the motor or control box.
E09	Desktop unbalanced at both ends	Check whether the load on the two sides of the tabletop is severely uneven. If not, press and hold the "▼" down key to reset.
E19	Product tilt fault	1. Check whether the product is tilted. 2. Check whether the transmission rod or column has a fault. 3. Check whether the control box is tilted. 4. Try lifting again to see whether the fault is resolved. 5. Replace the control box.
E20	Motor 1 two Hall faults	1. Check whether the motor cable is

		properly connected to the control box, reinsert it firmly, then press and hold the "▼" down key to reset. 2. Replace the motor or control box.
E21	Motor 2 two Hall faults	1. Check whether the motor cable is properly connected to the control box, reinsert it firmly, then press and hold the "▼" down key to reset. 2. Replace the motor or control box.
E22	Motor 1 power and Hall faults	1. Check whether the motor cable is properly connected to the control box, reinsert it firmly, then press and hold the "▼" down key to reset. 2. Replace the motor or control box.
E23	Motor 2 power and Hall faults	1. Check whether the motor cable is properly connected to the control box, reinsert it firmly, then press and hold the "▼" down key to reset. 2. Replace the motor or control box.
E30	Six-axis sensor fault	Replace the control box.
E41	Self-balancing adjustment failed	1. Check whether any foreign object under the desktop is blocking adjustment. 2. Check whether the legs are stuck. 3. Replace the control box.
_OL	Descent fault	Confirm that the desktop load does not exceed the rated load. If it does, reduce the load, then press and hold the "▼" down key to reset.

Part V. Long-Term Durability

Time is the true measure of reliability. For a truly professional standing desk, long-term durability is not merely a matter of stacking up materials, but a systematic engineering effort against deterioration over time. Nor is long-term durability a slogan: it is the ultimate demand on every component, every process and every test. We are willing to disclose these stringent test standards because we believe that true quality stands up to accelerated testing and years of scrutiny. We reject inflated specifications and short-termism, and have built a full-chain, quantifiable durability verification system to ensure that this desk can accompany you through tens of thousands of lifts while remaining as good as new.

5.1 Lifting Cycle Test

Overview: To verify reliability and stability under long-term frequent use and high-load conditions, continuous cycle validation was performed on the lifting system, mechanical structure and control system under rated load conditions. The test simulates real-world scenarios, including high-frequency daily adjustments and full-load operation, by executing repeated complete lift-lower cycles. Duty cycles with cooling intervals were incorporated to approximate actual operating conditions. Throughout the test, lifting noise, load capacity, self-locking performance and operating smoothness were monitored, with special emphasis on structural fatigue and control system durability.

Tbl. 31

Test ID	Test Name	Test Result
5.1 Core Test A		
5.1.1	Full-Load Lifting Fatigue Test	✓
5.1.2	Reset Fatigue Test	✓

CORE TEST A

Test Objective

Verify the stability of the standing desk's mechanical structure and control system under long-term, frequent operating conditions. This test ensures that the product maintains smooth lifting performance, resists mechanical failure or degradation and remains reliable over an extended service life.

Reference Standard: Corporate Test Protocol

Test Method

One lifting cycle refers to one ascent and one descent across the full travel. The test uses a 10% duty cycle (2 minutes of continuous operation followed by 18 minutes of rest). The test continues until functional anomalies, abnormal noises or structural damage occur.

Assessment Criteria

Throughout the test, the following performance criteria were applied in every cycle:

- The operating noise level shall not exceed 50 dB.
- The system must maintain the ability to lift a 180 kg (396.8 lb) load during normal powered operation.
- Static self-locking capacity shall not be less than 260 kg (573.2 lb).
- No abnormal sounds or obvious functional deviations shall occur.

Test Results

- 180 kg (396.8 lb) load: 15,000 cycles completed with no anomalies.
- 75 kg (165.3 lb) light load: 40,000 cycles completed, with 4 minutes of continuous operation followed by 13 minutes of rest, and no anomalies.
- Reset fatigue: 2,000 resets completed with no anomalies. A desk reset is triggered by compressing the lead screw, worm gear and other structures until the motor power reaches a set value, so reset fatigue testing is essential for verifying structural strength and durability.

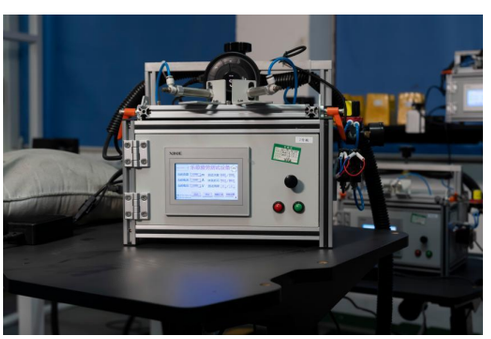

Fig. 26

Fig. 27

Tbl. 32

Date	Lifting Cycles	Abnormal ?		Date	Lifting Cycles	Abnormal ?		Date	Lifting Cycles	Abnormal ?
Sample No.: No. 1 Test Product:E7 Pro standing desk Test Mode: 75 kg (165.3 lb) load, 4 min on, 13 min off				Sample No.: No. 2 Test Product: E7 Pro standing desk Test Mode: 180 kg (396.8 lb) load, 2 min on, 18 min off				Sample No.: No. 3 Test Product: E7 Pro standing desk Test Mode: 180 kg (396.8 lb) load, 2 min on, 18 min off		
2026/1/29	0	None		2025/11/18	0	None		2025/11/18	0	None
2026/1/30	340	None		2025/11/19	200	None		2025/11/19	190	None
2026/2/2	1100	None		2025/11/21	580	None		2025/11/21	570	None
2026/2/3	1400	None		2025/11/24	1140	None		2025/11/24	1140	None
2026/2/4	1680	None		2025/11/26	1510	None		2025/11/26	1520	None
2026/2/4	1980	None		2025/11/28	1890	None		2025/11/28	1900	None
2026/2/5	2210	None		2025/12/1	2450	None		2025/12/1	2460	None
2026/2/5	2290	None		2025/12/3	2840	None		2025/12/3	2840	None
2026/2/9	3160	None		2025/12/8	3780	None		2025/12/8	3790	None
2026/2/10	3390	None		2025/12/10	4190	None		2025/12/10	4190	None

2026/2/11	3490	None		2025/12/12	4560	None		2025/12/12	4570	None
2026/2/11	3540	None		2025/12/15	5150	None		2025/12/15	5140	None
2026/2/12	3840	None		2025/12/17	5520	None		2025/12/17	5530	None
2026/2/24	4220	None		2025/12/19	5910	None		2025/12/19	5910	None
2026/2/25	4520	None		2025/12/22	6470	None		2025/12/22	6480	None
2026/2/26	4830	None		2025/12/24	6850	None		2025/12/24	6860	None
2026/2/27	5130	None		2025/12/26	7250	None		2025/12/26	7250	None
2026/2/28	5430	None		2025/12/29	7790	None		2025/12/29	7790	None
2026/3/2	6040	None		2025/12/31	8150	None		2025/12/31	8170	None
2026/3/3	6360	None		2026/1/2	8530	None		2026/1/2	8550	None
2026/3/4	6660	None		2026/1/5	9100	None		2026/1/5	9120	None
2026/3/5	6960	None		2026/1/7	9470	None		2026/1/7	9500	None
2026/3/6	7270	None		2026/1/9	9850	None		2026/1/9	9880	None
2026/3/11	8780	None		2026/1/12	10000	None		2026/1/12	10000	None
2026/3/12	9060	None		2026/1/13	10200	None		2026/1/13	10190	None
2026/3/17	10000	None		2026/1/16	10770	None		2026/1/19	11360	None
2026/3/18	10340	None		2026/1/19	11350	None		2026/1/23	11940	None
2026/3/25	12720	None		2026/1/23	11950	None		2026/1/30	13270	None
2026/4/1	15100	None		2026/1/26	12520	None		2026/2/6	14440	None
2026/4/8	17480	None		2026/1/29	13100	None		2026/2/13	15770	Abnormal noise
2026/4/15	19860	None		2026/2/2	13680	None		2026/2/23	15770	Abnormal noise
2026/4/22	22240	None		2026/2/5	14250	None		2026/2/26	16400	Abnormal noise
2026/4/29	24620	None		2026/2/8	14820	None				
2026/5/6	27000	None		2026/2/11	15400	Abnormal noise				
2026/5/13	29380	None		2026/2/14	15980	Abnormal noise				
2026/5/20	31760	None		2026/3/4	17740	Abnormal noise				
2026/5/27	34140	None								
2026/6/3	36520	None								
2026/6/10	38900	None								
2026/6/17	41280	None								

Tbl. 33

Test ID	Test Name	Test Objective	Test Method	Assessment Criteria	Test Result
5.1.2	Continuous Reset Fatigue Test	Verify the reliability of the mechanical structure after repeated resets.	The column was reset 2,000 times in succession.	Functions operate normally	Pass

Mechanical Structure Durability Test

Overview: To evaluate structural reliability and safety under long-term use and abnormal loading conditions, this module verifies complete desk assemblies and key stressed components. The evaluation combines real usage scenarios with extreme-condition tests. Specific test items include horizontal static load tests, horizontal durability tests, leg strength tests and desk drop tests. These tests simulate typical scenarios such as users leaning on the desk, lateral forces, localised impacts and accidental drops during transportation or operation. Through multi-dimensional stress and cyclic impact verification, the tests ensure stability, structural integrity and functional reliability, preventing potential risks caused by structural fatigue or localised failure.

Tbl. 34

Test ID	Test Name	Test Result
5.1 Core Test A		
5.1.3	Horizontal Durability Test	✓
5.1.4	Vertical Durability Test	✓
5.1.5	Leg Strength Test	✓
5.1.6	Desk Drop Test	✓

CORE TEST A

Test Objective

Verify the structural strength and stability of the standing desk when subjected to horizontal forces in daily use (such as leaning, pushing and drawer pulling). This test verifies the deformation resistance of the desktop, legs and connectors under horizontal forces, evaluates the structural stability of the product during long-term use and checks the strength of the desk frame's connection points.

Reference Standard: EN 527-2:2016+A1:2019

Test Method

Refer to Tbl. 35.

Tbl. 35

Test ID	Test Name	Reference Standard	Test Method	Assessment Criteria	Test Result
5.1.3	Horizontal Durability Test	EN 527-2:2016+A1:2019	1. The desk is adjusted to its highest height, not exceeding 950 mm (37.4 in). 2. Fix all desk feet and apply a 50 kg (110.2	1. No structural damage to the desk. 2. Lifting function normal, with no jamming or abnormal noise.	Pass

			lb) load on the 300±50 mm (11.8±1.97 in) × 300±50 mm (11.8±1.97 in) area of the desktop most favourable to preventing the desk from tipping, or via a disc 300±50 mm (11.8±1.97 in) in diameter. 3. As shown in Fig. 28, thrusts of 300 N (67.4 lbf) are applied in the order Fa, Fb, Fc, Fd (or first Fa, Fb, then Fc, Fd) at a position 50 mm (1.97 in) from the desk corner, for 10,000 cycles. 4. No structural or functional damage to the desk, and no permanent deformation or failure of parts.	3. No obvious deformation of the desktop observed.	
5.1.4	Vertical Durability Test	BIFMA X5.5:2021	1. Place the legs on a horizontal test platform to prevent movement; adjust the height-adjustable desk to its middle height, not exceeding 965 mm (38 in); load and close all extendable parts according to Table 1. 2. For a desktop width ≥ 457 mm (18 in), apply a 91 kg (200.6 lb) load via a disc 406±13 mm (16±0.51 in) in diameter at a position 25 mm (0.98 in) from the desk edge, at the centre of the unsupported long side. 3. For a desktop width < 457 mm (18 in), apply the load at the centre of the desktop. 4. The test cycle rate is 14±6 cycles/min, for 10,000 cycles.	1. No structural damage to the desk. 2. Lifting function normal, with no jamming or abnormal noise. 3. No obvious deformation of the desktop observed.	Pass
5.1.5	Leg Strength Test	BIFMA X5.5:2021	1. Fix the desk upside down on a horizontal test platform to prevent movement; adjust the height-adjustable desk to half of its travel; if the bottom of the leg has a rotating adjustment device, set it to the middle position, not exceeding	1. Structural integrity: no structural damage. All connections must remain secure without displacement, and the connection between the frame and desktop must remain intact. 2. Function: no functional failure. The desk must maintain	Pass

			13 mm (0.51 in). 2. Calculate the forces A and B required for the test according to the table; the functional test force A shall not exceed 445 N (100 lbf), and the proof test force shall not exceed 668 N (150.2 lbf). 3. Apply thrust to the leg at a position 25 mm (0.98 in) from the ground contact point, as shown in the figure.	normal lifting capability.	
5.1.6	Desk Drop Test	/	1. The desk is adjusted to its highest height, not exceeding 950 mm (37.4 in). 2. Lift one end of the desk's long side to a fixed height (net weight ≥ 45 kg (99.2 lb): 120 mm (4.72 in); net weight < 45 kg (99.2 lb): 180 mm (7.09 in)), then let it fall freely; repeat 10 times (5 times on each side).	The product must remain fully operable after the test sequence is completed.	Pass

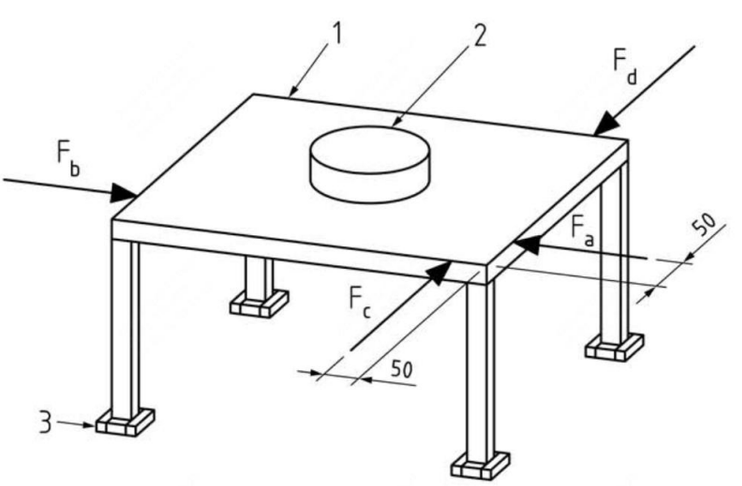

Fig. 28 Horizontal Durability Test

5.2 High and Low Temperature Tests

Material Durability Tests

Overview: To ensure the long-term reliability of the standing desk in actual home office use, comprehensive durability tests were performed on key materials and functional components. These tests cover extreme-temperature storage and operation, thermal shock, high-temperature and high-humidity environments, salt spray corrosion, drop impact and mechanical durability. By evaluating the lifting columns, hand control, cables and surface finishes, the tests verify stable performance, reliable operation and lasting durability under frequent use and changing environmental conditions.

Tbl. 36

Test ID	Test Name	Test Result
5.2 Core Test A		
5.2.1	High/Low Temperature Storage Test	Pass
5.2.2	High-Temperature & High-Humidity Storage Test	Pass
5.2.3	Thermal Shock Test	Pass
5.2 Core Test B		
5.2.4	High-Temperature & High-Humidity Operation Test	Pass
5.2.5	Low-Temperature Operation Test	Pass
5.2.6	Transportation Vibration Test	Pass
5.2.7	Salt Spray Test	Pass
5.2 Core Test C		
5.2.8	Cross-Cut Test	Pass
Other Tests		
5.2.9	Single-Leg Drop Test	Pass
5.2.10	Drop Test of Electrical Components	Pass

CORE TEST A

Test Objective

Verify the reliability of the E7 Pro standing desk under extreme temperature conditions, ensuring that key components operate normally during transportation, storage and daily use, with no cracking, deformation or discolouration of plastic parts and surfaces. The test also ensures that users experience stable, smooth operation in daily use, without abnormal noise, input delay or functional failures.

Reference Standard: IEC 60068-2-2:2007

Test Method

Refer to Tbl. 37.

Tbl. 37

Test ID & Test Name	Simulated Scenario	Test Method	Assessment Criteria	Test Result
Reference Standard: IEC 60068-2-2:2007 5.2.1 High/Low Temperature Storage Test	Extreme environments encountered during product transportation and storage.	1. Place the product in the high/low temperature chamber. 2. Set the program: ① Ramp up to 70°C (158°F) in 1 h ② Hold at 70°C (158°F) for 48 h ③ Ramp down to −40°C (-40°F) in 1 h ④ Hold at −40°C (-40°F) for 48 h ⑤ Set 4 cycles ⑥ After the cycles, dry at 40°C (104°F) for 2 h, then return to room temperature (25°C [77°F]) in 1 h Notes: 1. Specific conditions of high/low temperature storage depend on the specific product specifications. 2. For high/low temperature storage tests, the product's programming port needs a rubber plug.	1. No deformation/discolouration of the product housing/cables/slots. 2. No functional anomalies in the product. 3. Pass only when all the above conditions are met.	Pass
Reference Standard: IEC 60068-2-2:2007 5.2.2 High-Temperature & High-Humidity Storage Test	Extreme environments encountered during product transportation and storage.	1. Place the product in the high/low temperature chamber. 2. Set the program: temperature 70°C (158°F), humidity 90%; ramp up over 1 h, hold for 48 h. 3. Dry at 40°C (104°F) with 0% humidity for 2 h, then return to room temperature (25°C [77°F]) in 1 h. Notes: 1. Specific conditions depend on the specific product specifications. 2. For high-temperature & high-humidity storage tests, the product's programming port needs a rubber plug.	1. No deformation/discolouration of the product housing/cables/slots. 2. No functional anomalies in the product. 3. Pass only when all the above conditions are met.	Pass
Reference Standard: IEC 60068-2-2:2007 5.2.3 Thermal Shock Test	Effect of environmental changes on plastic parts during transportation and storage.	1. Place the product in a low-temperature environment of −40°C (−40°F) for 30 minutes. 2. Transfer the product to a high-temperature chamber at +70°C (158°F) within 30 seconds. 3. Keep it in the high-temperature chamber for 30 minutes. 4. Move the product back to the low-temperature chamber within 30 seconds (inclusive). 5. Repeat the above process for a total of 10 cycles.	The product's appearance should be normal, without deformation or discolouration. Mechanical and electrical performance should remain within normal operating specifications.	Pass

High/Low Temperature Storage Test 1

High/Low Temperature Storage Test 2

High-Temperature & High-Humidity Storage Test 1

CORE TEST B

Test Objective

Verify the operational stability and functional reliability of the standing desk system under extreme environmental conditions. Through salt spray, high-temperature, low-temperature and high-temperature/high-humidity tests, this programme verifies that the control system, motors and structural components maintain normal height adjustment capability and operational responsiveness without anomalies. These tests confirm the safety and long-term durability of the product in different climates and usage environments.

Reference Standard: IEC 60068-2-2:2007

Test Method

Refer to Tbl. 38.

Tbl. 38

Test ID & Test Name	Test Method	Assessment Criteria	Test Result
Reference Standard: IEC 60068-2-2:2007 5.2.4 High-Temperature & High-Humidity Operation Test	1. Place the product in the high/low temperature chamber. 2. Set the program: temperature 40°C (104°F), humidity 95%; ramp up over 1 h, hold for 48 h. 3. After 48 h, repeat the following: display test, reset test, lifting test, obstacle-triggered reversal test, child lock test, fault test, charging stability test, hot-plugging the motor cable, frequent power cuts during operation, pressing multiple keys simultaneously, multiple rapid direction changes during operation and overload test (the product must remain in the chamber during the test). Notes: 1. Specific conditions of high/low temperature testing depend on the specific product specifications. 2. For high-temperature & high-humidity tests, the product's programming port needs a rubber plug.	1. No deformation/discolouration of the product housing/cables/slots. 2. No functional anomalies in the product. 3. Pass only when all the above conditions are met.	Pass

Reference Standard: IEC 60068-2-2:2007 5.2.5 Low-Temperature Operation Test	1. Place the product in the high/low temperature chamber. 2. Set the program: temperature −40°C (-40°F), humidity 0%; ramp down over 1 h, hold for 24 h. 3. After 24 h, repeat the following: display test, reset test, lifting test, obstacle-triggered reversal test, child lock test, fault test, charging stability test, hot-plugging the motor cable, frequent power cuts during operation, pressing multiple keys simultaneously, multiple rapid direction changes during operation and overload test (the product must remain in the chamber during the test). Notes: 1. The specific low-temperature conditions depend on the product specifications. 2. For low-temperature tests, the product's programming port needs a rubber plug.	1. No deformation/discolouration of the product housing/cables/slots. 2. No functional anomalies in the product. 3. Pass only when all the above conditions are met.	Pass
Reference Standard: Product Requirement Specification 5.2.6 Transportation Vibration Test	1. Place the packaged product into the shipping carton (shipping packaging form). For irregularly shaped products, wait until the turnover packaging is completed before performing this test (provided by project coordination). 2. Clamp and fix the test sample with horizontal and vertical clamping tables. 3. Set the parameters of the transportation simulation vibration table: ① Rotational speed: 150 rpm (revolutions per minute) ② Test duration: 2 hours	1. No deformation/discolouration of the housing/cables/slots. 2. No functional anomalies in the product. 3. No cracks or fractures in solder joints/materials. 4. Pass only when all the above conditions are met.	Pass
Reference Standards: ASTM B117-19; IEC 60068-2-52:2017 5.2.7 Salt Spray Test	1. The salt solution is prepared with 5% sodium chloride (NaCl) and 95% purified water by mass, with the pH maintained at 6.5–7.2. 2. The sample is placed face up at a tilt angle of 15°–30° from the vertical. 3. The spray deposition rate is maintained at 1–2 mL/h per 80 cm^2 (12.4 in^2). 4. The chamber temperature is maintained at 35±2°C (95±3.6°F). 5. The sample is continuously exposed for 48 hours. 6. After exposure, the sample is rinsed with purified water. 7. The sample is inspected for any changes or damage.	Hardware components, including the frame, screws and casters, shall show no rusting, discolouration or coating detachment.	Pass

High-Temperature & High-Humidity Operation Test 1

Low-Temperature Operation Test 1

Transportation Vibration Test 1

Transportation Vibration Test 2

Salt Spray Test 1

CORE TEST C

Test Objective

Evaluate the adhesion between the powder coating and the substrate using the cross-cut test method. This ensures the stability and consistency of the coating process, verifying that the coating can resist peeling or detachment during daily use, transportation or environmental fluctuations, thereby ensuring surface durability and long-term protection.

Reference Standards: ISO 2409:2020; ASTM D3359-23

5.2.8 Cross-Cut Test

Test Method

1. As shown below, a grid pattern of 100 squares (each 1.0 mm × 1.0 mm [0.04 in × 0.04 in]) was cut into the coating on the steel substrate.
2. Loose debris was removed from the test area using a soft brush.
3. Standardised tape was applied to the grid pattern. An eraser was used to apply pressure and squeeze out air bubbles, ensuring the tape fully adhered to the coating.
4. The tape remained in place for 1–2 minutes.

5. The tape was rapidly peeled off at an angle between 60° and 90°.

The assessment criteria require ISO Class 0 and ASTM Class 5B.

Test Results

The test was passed, meeting ISO Class 0 / ASTM Class 5B. The full classification scale is shown below for reference.

Tbl.39

ISO Class	ASTM Class	Test Result
0	5B	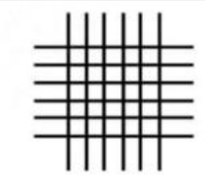
1	4B	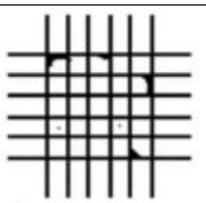
2	3B	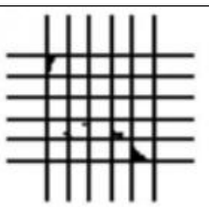
3	2B	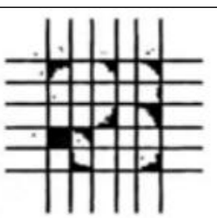
4	1B	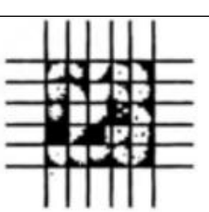
5	0B	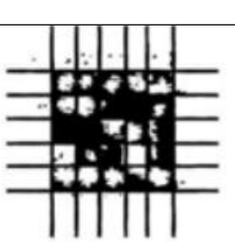

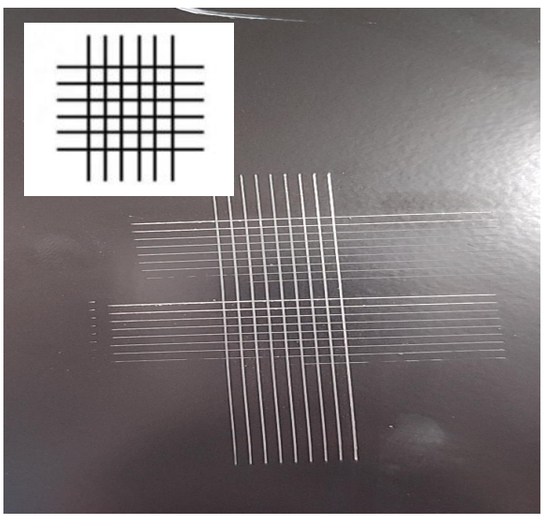

Other Tests

Tbl. 40

Test ID	Test Name	Test Objective	Test Method	Assessment Criteria	Test Result
5.2.9	Single-Leg Drop Test	Verify structural integrity, electrical safety and impact resistance during handling, installation and possible accidental drops.	1. The lifting column is fully retracted to the reset position. 2. The motor is placed facing up, and the column is lifted to a height of 800 mm (31.5 in). 3. The column is dropped in free fall.	The product should operate normally after impact.	Pass
5.2.10	Drop Test of Electrical Components	Verify structural integrity, electrical safety and impact resistance during handling, installation and possible accidental drops.	1. The control box and hand control are raised to a height of 1 m (3.28 ft). 2. The components are dropped in free fall.	The product should operate normally after impact.	Pass

5.3 Keypad and Performance Cycle Tests

Overview: By evaluating the hand control, cables and surface finishes, the tests verify stable performance, reliable operation and lasting durability under frequent use and changing environmental conditions.

Tbl. 41

Test ID	Test Name	Test Result
5.3.1	Key Durability Test	Pass
5.3.2	Cable Pull Force Test	Pass
5.3.3	Plug/Unplug Test	Pass
5.3.4	Hand Control Silkscreen Adhesion Test	Pass
5.3.5	Hand Control Silkscreen Alcohol Resistance Test	Pass
5.3.6	Hand Control Silkscreen Perspiration Resistance Test	Pass
5.3.7	Hand Control Silkscreen Solvent Resistance Test	Pass
5.3.8	Abrasion Test	Pass

Tbl. 42

Test ID	Test Name	Test Objective	Test Method	Assessment Criteria	Test Result
5.3.1	Key Durability Test	Verify the reliability of the hand control keys	1. Pressing force: 300 g (10.6 oz) ± 50 g (1.8	Functions normally without damage	Pass

		under long-term, high-frequency use.	oz). 2. Pressing frequency: 50 times/min. 3. Test count: 60,000 times.		
5.3.2	Cable Pull Force Test	Evaluate the structural integrity and electrical stability of the control box cables under repeated bending and flexing conditions simulating daily use.	1. Tie a knot in the harness 2 cm (0.79 in) from the fixed terminal, keeping the knot as small as possible. 2. Pull the cable 25 times with a force of 60 N (13.5 lbf), applied in the most unfavourable direction without jerking, with each pull lasting 1 s.	Functions normally without damage	Pass
5.3.3	Plug/Unplug Test	Evaluate the reliability of the hand control under repeated plugging/unplugging in daily use.	1. Hot-plug the USB port 10,000 times. 2. Plug/unplug the RJ45 connector 5,000 times.	Functions normally without damage	Pass
5.3.4	Hand Control Silkscreen Adhesion Test	Evaluate the adhesion reliability of the silkscreen under repeated touching in daily hand control use.	Apply 3M600 clear tape, or clear tape with an adhesion greater than 5.3 N/18 mm (1.7 lbf/in), onto the printed text or pattern to be tested and press it flat by hand; then lift the tape tail at 90° to the test surface and quickly peel off the tape. Repeat 3 times at the same position.	Printed markings must remain clear, with no loss of legibility or character defects.	Pass
5.3.5	Hand Control Silkscreen Alcohol Resistance Test	Evaluate the chemical and abrasion resistance of the silkscreen markings under daily cleaning and friction conditions, verifying fade and scratch resistance.	Moisten a white cloth with 99% alcohol solution, and wipe back and forth 100 times at the same position on the printed text and pattern, at a pressure of 1 kg (2.2 lb) and a speed of once per second.	1. The coating shall not wear through to the substrate. 2. No discolouration shall occur. 3. Printed markings must remain clear, with no loss of legibility or character defects.	Pass
5.3.6	Hand Control Silkscreen Perspiration Resistance Test	Evaluate the perspiration resistance of the silkscreen markings under daily use conditions.	Moisten a white cloth with artificial perspiration of pH 4.7, and wipe back and forth 50 times at the same position, at a pressure of 1 kg (2.2 lb) and a speed of once per second.	Printed markings must remain clear, with no loss of legibility or character defects.	Pass
5.3.7	Hand Control Silkscreen Solvent Resistance Test	Evaluate the chemical resistance of the silkscreen markings under daily cleaning conditions.	Drop 1 mL of isopropyl alcohol solution onto the silkscreen surface, and wipe it dry with a white cloth after 10	Printed markings must remain clear, with no loss of legibility or character defects.	Pass

			minutes.		
5.3.8	Abrasion Test	Evaluate the abrasion resistance of the silkscreen under daily use and friction conditions, verifying scratch and damage resistance.	Fix the specimen, apply a vertical force of 500 g (17.6 oz) and rub back and forth over the silkscreen text or pattern with a 15 mm (0.59 in) stroke (each single stroke counts as one) for 50 consecutive strokes.	No visible scratches on the surface.	Pass

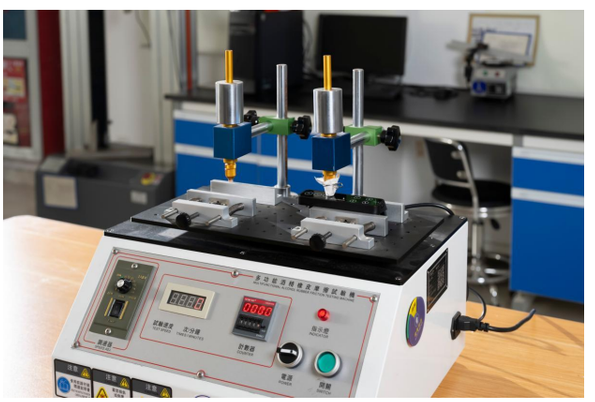

Alcohol Resistance Test 1

Part VI. Energy Efficiency & Environmental Responsibility

We embed energy efficiency and environmental responsibility deep in the underlying logic of the electronic control system. Through a dual strategy of low-power standby architecture and stringent suppression of conducted/radiated emissions, we are committed to building a green standing desk that is efficient, clean, energy-saving and safe. Energy efficiency and environmental responsibility are not a compromise on performance, but an advance in technology. Through "milliwatt-level" energy control and "laboratory-level" electromagnetic cleanliness, this desk delivers powerful performance while always respecting energy resources and protecting health. Choosing it means choosing not only a healthier way of working, but also a more responsible attitude towards life.

6.1 Low Standby Power Consumption Test

Tbl. 43

Test ID	Test Name	Reference Standard	Test Result
6.1.1	Energy Consumption Test	(EU) 2023/826	✓
6.1.2	CE-EMC	EN IEC 55014-1	✓
6.1.3	FCC	FCC 47 CFR Part 15 Subpart B and ICES-003 Issue 7	✓

Test Objective

Evaluate the power consumption of the standing desk in standby mode, and verify its energy efficiency performance over long-term use.

Reference Standard: (EU) 2023/826

Test Method

1. Connect the product to a regulated power supply and a power meter, connect all supporting equipment and fix the control box to prevent vibration.
2. Adjust the voltage to AC 240 V/50 Hz, put the sample into standby mode and start timing for 15 min.
3. After 15 min, calculate the standby power value: measured energy (mWh) × 4 / 1000.
4. The power strip connected to the power meter output must not have indicator lights.
5. If the accessories include a wireless charging product, it must not be covered by metal; if there are multiple handsets, adapters or accessory combinations, all must be tested.
6. During the test, ensure that the device enters low-power mode and check that the handset display indicator light is off.
7. The measured standby power in the test result is 0.252 W (63 mWh measured over 15 min, converted to standby power as 63 × 4 / 1000 = 0.252 W). This result is below the regulatory limit and meets the specified energy consumption requirements.

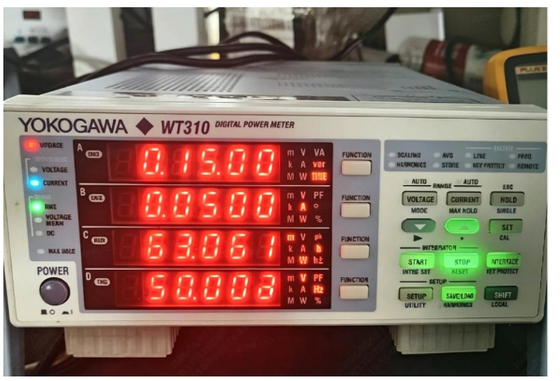

Fig. 29

6.1.2 Conducted / Radiated Emissions

Test Objective

Evaluate and regulate the level of conducted electromagnetic disturbance emitted by electronic products through power lines, signal lines, control lines or ground wires, in accordance with unified standards (limits).

Reference Standard: EN IEC 55014-1

Test Method

1. Conducted test method, tabletop equipment: the equipment under test (EUT) should be placed on a non-conductive table 0.4 m [1.31 ft] (or 0.8 m (2.62 ft)) high; all other conductive surfaces should be more than 0.4 m (1.31 ft) away from the reference ground plane; and the EUT's cables should hang down from the rear edge of the test table.
2. Floor-standing equipment: the EUT should be placed on a horizontal reference ground plane, oriented as in normal use; metal parts and cables should be no more than 15 cm (5.91 in) from the reference ground plane; and excess cable should be bundled at its centre into a harness not exceeding 0.4 m (1.31 ft), or laid in a serpentine pattern, with the harness located 0.4 m (1.31 ft) above the horizontal reference ground plane.

Assessment Criteria

Tune the electromagnetic interference (EMI) receiver to the peak frequency in reception mode and measure the quasi-peak (QP) and/or average (AV) levels of the signal. If the level of the measured signal is unstable, the QP and AV readings should be observed for at least 15 seconds and the maximum value recorded. The EMI receiver should remain tuned to the discrete frequency under investigation and be retuned when the frequency fluctuates. The test frequency range is 150 kHz–30 MHz.

Test Results

The results meet the limits required by the standard.

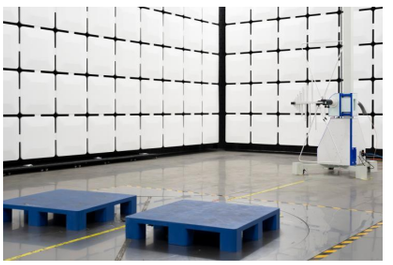

Fig. 30

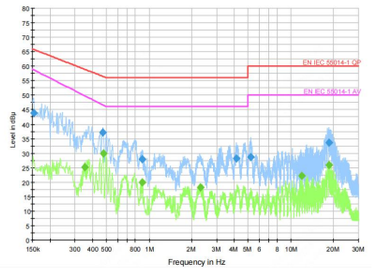

Fig. 31

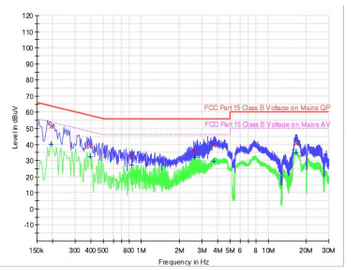

Fig. 32

Radiated Test Method

1. Tabletop equipment: the EUT is placed on a remote-controlled turntable in a semi-anechoic chamber, at (0.8±0.05) m [2.62±0.16 ft] above the reference plane at the measurement point; 1 m (3.28 ft) of the EUT's cables should be exposed to the electromagnetic field.
2. Floor-standing equipment: the EUT is placed at (0.12±0.04) m [0.39±0.13 ft] above the reference plane at the selected measurement point; 0.3 m (0.98 ft) of the EUT's cables should be exposed to the electromagnetic field, with excess cable hanging vertically downward.
3. Set the receiving antenna to horizontal polarisation and vary the antenna height between 1 m (3.28 ft) and 4 m (13.12 ft) until the measurement receiver obtains the maximum reading; rotate the turntable to turn the EUT horizontally around its centre until the receiver obtains the maximum reading; then switch the receiving antenna to vertical polarisation and repeat these steps. Use these steps to measure the maximum field strength at each frequency point, which is defined as the radiated disturbance value at that point.

Assessment Criteria

The test frequency range is 30 MHz–1000 MHz.

Test Results

The results meet the limits required by the standard.

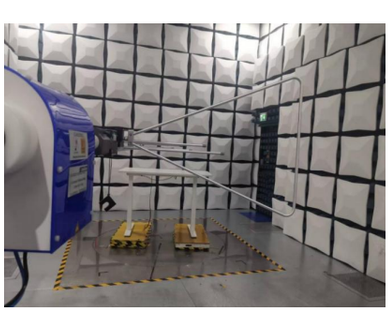

Fig. 33

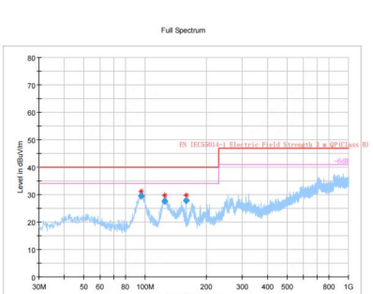

Fig. 34

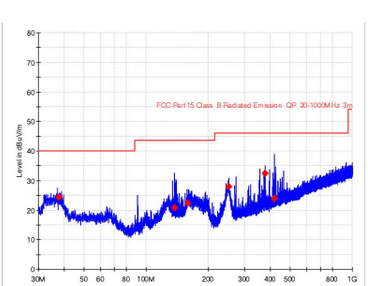

Fig. 35

SECTION 3

Real-World Validation

This report adopts a dual verification system of "laboratory standard testing + real-world home workspace verification". It does not merely present parameters, but verifies them in users' real usage scenarios. The six test modules above verified the performance of the E7 Pro standing desk frame under controlled laboratory conditions from an engineering standards perspective. In actual purchase decisions, however, users often care less about whether a single parameter meets a standard than about a more direct question: in my own home, with my own usage habits, is this desk really reliable?

This section addresses the three concerns users raise most often before buying (stability while working, safety when lowering, and tabletop material and workmanship) and explains the targeted real-world home office verifications we performed to supplement the laboratory data above. Each part is accompanied by a filmed demonstration video, which can be viewed alongside the text in this section.

Real-World Home Scenario Validation

From reliable performance to real home

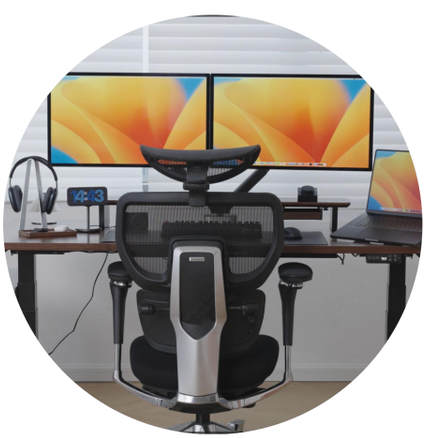

01 Extreme Work Stability Validation

02 Intelligent Safety Protection Validation

03 Desktop Quality and Durability Validation

Part I. Stability Under Heavy Loads

"Does it wobble while I'm working? Will writing or typing cause shaking? Is it still stable with dual monitors and under high load?"

This is the first type of question users ask when choosing a standing desk. We carried out corresponding verifications in a real-world home office scenario. With the desktop carrying dual monitors, a laptop and other common office equipment, we observed whether the monitors and items on the desktop shook during high-frequency actions such as continuous typing, fast mouse movement and writing. Typing tests were also performed at three common heights (75 cm [29.5 in] for sitting, 95 cm (37.4 in) for mixed use and 128 cm (50.4 in) for maximum standing height) to verify whether stability was consistent at different heights. In addition, we recreated real scenarios more prone to wobbling, such as leaning against the desk, pushing against it and using a walking treadmill underneath. The actual performance in these scenarios corroborates the laboratory data on overall wobble displacement and horizontal static load in the structural stability chapter. The laboratory data show that the desk's displacement under standardised loads is within the industry acceptance limit, and the real-world checks confirm that this stability holds in conditions closer to actual use: high-frequency daily actions, multiple heights and long-duration full loads. With dual-monitor loads, at multiple lifting heights and in daily office tasks such as typing and writing, the FlexiSpot E7 Pro maintains good desktop stability and meets everyday office needs.

Watch the Test Video

Part II. Smart Anti-Collision Safety

"Is it safe when the desk lowers onto a chair, cabinet or other object?"

In home office scenarios, the items under the desk are often more varied than in laboratory test conditions: chairs may be casually pushed underneath, and cardboard boxes or other items may be temporarily stacked beside the legs. To verify protection in these scenarios, we placed three of the most common home office obstructions under the desk (a rigid cabinet, the two armrests of an office chair and an empty plastic water bottle), representing rigid, semi-rigid and low-stiffness materials, and tested detection sensitivity and reversal as the desk lowered. These three obstacle scenarios correspond directly to the obstacle-triggered reversal tests in the safety assurance chapter; the real-scenario demonstrations map the laboratory figures onto the situations users encounter most often in daily life. When facing common obstacles such as cabinets and chairs, the FlexiSpot E7 Pro can stop and reverse when detection conditions are met.

Watch the Test Video

Part III. Desktop Strength & Durability

"Will the tabletop be too thin, sag, get scratched or fail to hold a monitor arm clamp? Will the desk surface easily retain stains and scratches?"

To answer these questions, we performed four real-world tests on a currently sold tabletop: measuring its thickness; a sag test under long-term load; a clamping test with a common clamp-type monitor arm, checking whether the contact area deforms or

slips; and stain and scratch tests using coffee, water and other household liquids (stain residue and ease of cleaning) and keys and other everyday items (scratch depth and visibility). These verifications let users deciding whether to buy a separate tabletop, and which one, see how a real matching example performs, rather than judging only from the thickness and material names on a specification sheet. The results present the actual performance of the selected tabletop in thickness, load deformation, mount clamping, and stain and scratch resistance, providing a reference for users selecting a tabletop.

Note: The core product of the E7 Pro is the electric standing desk frame; the tabletop is not a fixed configuration, and users can choose freely according to their needs and budget. The above content does not make performance claims about any specific fixed tabletop product. Rather, because thickness, sagging over time, and stains and scratches are common concerns when choosing a tabletop, we tested a currently sold tabletop as a real matching example for reference.

Watch the Test Video

SECTION 4

Known Boundary Conditions

In presenting this product, we aim not only to showcase its current performance, but also to acknowledge its known technical boundaries candidly and to identify clear directions for future optimisation.This transparency reflects our long-term commitment to our users.

Regarding the obstacle-triggered reversal function, our dual protection system (current sensing + gyroscope) achieves a millisecond-level, highly sensitive response to rigid obstacles (such as cabinets, furniture and cables). However, given the physical sensing principles commonly used in the industry today, we clearly recognise a known boundary of the system: For extremely soft, highly flexible or very lightweight obstacles (such as sponges and loose tissues), there is a possibility of a reduced trigger probability or a delayed response at certain angles and speeds. This is because such objects have difficulty generating a sufficient instantaneous torque change or attitude shift to exceed the system's false-trigger filter threshold. We candidly acknowledge this boundary to avoid absolute and misleading claims, and to ensure that users exercise reasonable care in specific scenarios during use.

APPENDIX A

Test List

Test ID	Test Name	Test ID	Test Name
1.2.1	Structural Rigidity Test	3.1.3	Upward Obstacle Detection Verification Test
1.2.2	Horizontal Static Load Test	3.1.4	Downward Obstacle Detection Verification Test (Rigid Obstacle)
1.2.3	Additional Horizontal Static Load Test	3.1.5	Downward Obstacle Detection Verification Test (Semi-Rigid Obstacle 1)
1.2.4	Vertical Static Load Test	3.1.6	Downward Obstacle Detection Verification Test (Semi-Rigid Obstacle 2)
1.2.5	Additional Vertical Static Load Test	3.1.7	Downward Obstacle Detection Verification Test ((Low-Stiffness Obstacle)
1.2.6	Stability Test	3.2.1	Static Fail-Safe Position Holding Test
1.2.7	Vertical Stability Test	3.2.2	Gyroscope Tilt Angle Verification Test
1.2.8	Vertical Impact Test	3.3.1	Dielectric Strength Test
1.2.9	Structural Rigidity Test (2000 mm [78.7 in] Long Tabletop)	3.3.2	Temperature Rise Test
1.2.10	Horizontal Static Load Test (2000 mm [78.7 in] Long Tabletop)	3.3.3	Electrostatic Discharge
1.2.11	Additional Horizontal Static Load Test (2000 mm [78.7 in] Long Tabletop)	4.1.1	Fundamental Parameters Compliance Test I
1.2.12	Vertical Static Load Test (2000 mm [78.7 in] Long Tabletop)	4.1.2	Fundamental Parameters Compliance Test II
1.2.13	Additional Vertical Static Load Test (2000 mm [78.7 in] Long Tabletop)	4.1.3	Fundamental Parameters Compliance Test III
1.2.14	Overall Wobble Displacement (2000 mm [78.7 in] Long Tabletop)	4.1.4	Fundamental Parameters Compliance Test IV
1.2.15	Stability Test Under Vertical Load (2000 mm [78.7 in] Long Tabletop)	4.1.5	Power Supply Voltage Test
1.2.16	Vertical Impact Test (2000 mm [78.7 in] Long Tabletop)	4.1.6	Minimum Height Verification Test
2.1.1	Desktop Load Deflection Test	4.1.7	Maximum Height Verification Test
2.3.1	Noise Test	4.1.8	Hand Control Jog Function Test
2.3.2	Abnormal Operating Noise Test	4.1.9	Hand Control Continuous Operation Test
3.1.1	Obstacle Detection and Rebound Function Verification Test I	4.1.10	Sleep Mode Position Memory Retention Test I
3.1.2	Obstacle Detection and Rebound Function Verification Test II	4.1.11	Max/Min Height Limit Memory Retention After Power Loss Test
4.1.12	Menu Settings Memory Retention	4.2.2	Continuous Lifting and Lowering

	After Power Loss Test		
4.1.13	Interface Hot-Plug Reliability Test I	4.2.3	Repeated Switching Between Rising and Lowering
4.1.14	Interface Hot-Plug Reliability Test II	4.2.4	Continuous Lifting to Maximum Height
4.1.15	Interface Hot-Plug Reliability Test III	4.2.5	Continuous Lowering to Minimum Height
4.1.16	Interface Hot-Plug Reliability Test IV	5.1.1	Full-Load Lifting Fatigue Test
4.1.17	Interface Hot-Plug Reliability Test V	5.1.2	Reset Fatigue Test
4.1.18	Interface Hot-Plug Reliability Test VI	5.1.3	Horizontal Durability Test
4.1.19	Interface Hot-Plug Reliability Test VII	5.1.4	Vertical Durability Test
4.1.20	Interface Hot-Plug Reliability Test VIII	5.1.5	Leg Strength Test
4.1.21	Interface Hot-Plug Reliability Test IX	5.1.6	Desk Drop Test
4.1.22	Interface Hot-Plug Reliability Test X	5.2.1	High/Low Temperature Storage Test
4.1.23	Interface Hot-Plug Reliability Test XI	5.2.2	High-Temperature & High-Humidity Storage Test
4.1.24	Interface Hot-Plug Reliability Test XII	5.2.3	Thermal Shock Test
4.1.25	Interface Hot-Plug Reliability Test XIII	5.2.4	High-Temperature & High-Humidity Operation Test
4.1.26	Interface Hot-Plug Reliability Test XIV	5.2.5	Low-Temperature Operation Test
4.1.27	Interface Hot-Plug Reliability Test XV	5.2.6	Transportation Vibration Test
4.1.28	Hand Control Position Programming and Reset Verification Test	5.2.7	Salt Spray Test
4.1.29	Memory Button Quantity Verification Test	5.2.8	Cross-Cut Test
4.1.30	Position Memory Function Verification Test	5.2.9	Single-Leg Drop Test
4.1.31	Multiple Memory Settings Function Test	5.2.10	Drop Test of Electrical Components
4.1.32	Soft Start and Soft Stop Motion Test	5.3.1	Key Durability Test
4.1.33	Hand Control Sleep Timer Test	5.3.2	Cable Pull Force Test
4.1.34	Hand Control Wake-Up Test	5.3.3	Plug/Unplug Test
4.1.35	Hand Control Device Charging Test	5.3.4	Hand Control Silkscreen Adhesion Test
4.2.1	Multi-Motor Synchronisation Test	5.3.5	Hand Control Silkscreen Alcohol Resistance Test
5.3.6	Hand Control Silkscreen Perspiration Resistance Test		
5.3.7	Hand Control Silkscreen Solvent Resistance Test		

5.3.8	Abrasion Test		
6.1.1	Energy Consumption Test		
6.1.2	CE-EMC		
6.1.3	FCC		

APPENDIX B

Applicable Test Standards

Test ID	Test Name	Reference Standard
1.2.1	Structural Rigidity Test	EN 527-2:2016+A1:2019
1.2.2	Horizontal Static Load Test	EN 527-2:2016+A1:2019
1.2.3	Additional Horizontal Static Load Test	EN 527-2:2016+A1:2019
1.2.4	Vertical Static Load Test	EN 527-2:2016+A1:2019
1.2.5	Additional Vertical Static Load Test	EN 527-2:2016+A1:2019
1.2.7	Vertical Stability Test	EN 527-2:2016+A1:2019
1.2.8	Vertical Impact Test	EN 527-2:2016+A1:2019
1.2.9	Structural Rigidity Test (2000 mm [78.7 in] Long Tabletop)	EN 527-2:2016+A1:2019
1.2.10	Horizontal Static Load Test (2000 mm [78.7 in] Long Tabletop)	EN 527-2:2016+A1:2019
1.2.11	Additional Horizontal Static Load Test (2000 mm [78.7 in] Long Tabletop)	EN 527-2:2016+A1:2019
1.2.12	Vertical Static Load Test (2000 mm [78.7 in] Long Tabletop)	EN 527-2:2016+A1:2019
1.2.13	Additional Vertical Static Load Test (2000 mm [78.7 in] Long Tabletop)	EN 527-2:2016+A1:2019
1.2.15	Stability Test Under Vertical Load (2000 mm [78.7 in] Long Tabletop)	EN 527-2:2016+A1:2019
1.2.16	Vertical Impact Test (2000 mm [78.7 in] Long Tabletop)	EN 527-2:2016+A1:2019
2.1.1	Desktop Load Deflection Test	EN 527-2:2016+A1:2019
2.3.1	Noise Test	ISO 3745:2012
2.3.2	Abnormal Operating Noise Test	ISO 3745:2012
3.1.1	Obstacle Detection and Rebound Function Verification Test I	IEC 60335-2-116:2019
3.1.2	Obstacle Detection and Rebound Function Verification Test II	IEC 60335-2-116:2019
3.3.1	Dielectric Strength Test	IEC 60335-1
3.3.2	Temperature Rise Test	IEC 60335-1
3.3.3	Electrostatic Discharge	IEC 61000-4-2
5.1.3	Horizontal Durability Test	EN 527-2:2016+A1:2019
5.1.4	Vertical Durability Test	BIFMA X5.5:2021
5.1.5	Leg Strength Test	BIFMA X5.5:2021
5.2.1	High/Low Temperature Storage Test	IEC 60068-2-2:2007
5.2.2	High-Temperature & High-Humidity Storage Test	IEC 60068-2-2:2007
5.2.3	Thermal Shock Test	IEC 60068-2-2:2007
5.2.4	High-Temperature & High-Humidity Operation Test	IEC 60068-2-2:2007
5.2.5	Low-Temperature Operation Test	IEC 60068-2-2:2007

5.2.7	Salt Spray Test	ASTM B117-19
5.2.8	Cross-Cut Test	ISO 2409:2020 / ASTM D3359-23
6.1.1	Energy Consumption Test	(EU) 2023/826
6.1.2	CE-EMC	EN IEC 55014-1
6.1.3	FCC	FCC 47 CFR Part 15 Subpart B and ICES-003 Issue 7

APPENDIX C

Third-Party Verification

Test ID	Test Name	Laboratory	Reference Standard	Test Result	Test Report
1.2.1	Structural Rigidity Test	TÜV SÜD	EN 527-2:2016+A1:2019	Pass	Whole-unit + CE-MD Report (EN 527-2 Section)
1.2.2	Horizontal Static Load Test	TÜV SÜD	EN 527-2:2016+A1:2019	Pass	Whole-unit + CE-MD Report (EN 527-2 Section)
1.2.3	Additional Horizontal Static Load Test	TÜV SÜD	EN 527-2:2016+A1:2019	Pass	Whole-unit + CE-MD Report (EN 527-2 Section)
1.2.4	Vertical Static Load Test	TÜV SÜD	EN 527-2:2016+A1:2019	Pass	Whole-unit + CE-MD Report (EN 527-2 Section)
1.2.5	Additional Vertical Static Load Test	TÜV SÜD	EN 527-2:2016+A1:2019	Pass	Whole-unit + CE-MD Report (EN 527-2 Section)
1.2.7	Vertical Stability Test	TÜV SÜD	EN 527-2:2016+A1:2019	Pass	Whole-unit + CE-MD Report (EN 527-2 Section)
1.2.8	Vertical Impact Test	TÜV SÜD	EN 527-2:2016+A1:2019	Pass	Whole-unit + CE-MD Report (EN 527-2 Section)
2.1.1	Desktop Load Deflection Test	TÜV SÜD	EN 527-2:2016+A1:2019	Pass	Whole-unit + CE-MD Report (EN 527-2 Section)
3.1.1	Obstacle Detection and Rebound Function Verification Test I	TÜV SÜD	IEC 60335-2-116:2019	Pass	Whole-unit + CE-MD Report (Safety Section)
3.1.2	Obstacle Detection and Rebound Function Verification Test II	TÜV SÜD	IEC 60335-2-116:2019	Pass	Whole-unit + CE-MD Report (Safety Section)
3.3.1	Dielectric Strength Test	TÜV SÜD	IEC 60335-1	Pass	Whole-unit + CE-MD Report (Safety Section)
3.3.2	Temperature Rise Test	TÜV SÜD	IEC 60335-1	Pass	Whole-unit + CE-MD Report (Safety Section)
3.3.3	Electrostatic Discharge	Drotek	IEC 61000-4-2	Pass	Whole-unit CE-EMC Report
5.1.3	Horizontal Durability Test	TÜV SÜD	EN 527-2:2016+A1:2019	Pass	Whole-unit + CE-MD Report (EN 527-2 Section)
5.1.4	Vertical Durability Test	TÜV Rheinland	BIFMA X5.5:2021	Pass	Whole-unit BIFMA Report
5.1.5	Leg Strength Test	TÜV Rheinland	BIFMA X5.5:2021	Pass	Whole-unit BIFMA Report
6.1.1	Energy Consumption Test	TÜV Rheinland	(EU) 2023/826	Pass	CB38M2M(IB) Control System ERP Report CN25QLK4 001
6.1.2	CE-EMC	Drotek	EN IEC 55014-1	Pass	Whole-unit CE-EMC Report

APPENDIX D

Test Reports

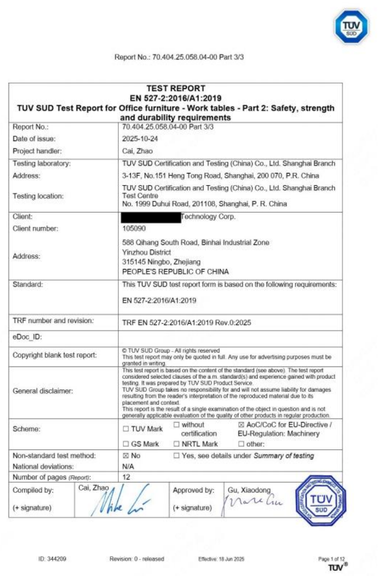

Report No.: 70.404.25.058.04-00 Part 3/3

TEST REPORT
EN 527-2:2016/A1:2019
TUV SUD Test Report for Office furniture - Work tables - Part 2: Safety, strength and durability requirements

Report No.:	70.404.25.058.04-00 Part 3/3
Date of issue:	2025-10-24
Project handler:	Cai, Zhao
Testing laboratory:	TUV SUD Certification and Testing (China) Co., Ltd. Shanghai Branch
Address:	3-13F, No.151 Heng Tong Road, Shanghai, 200 070, P.R. China
Testing location:	TUV SUD Certification and Testing (China) Co., Ltd. Shanghai Branch Test Centre No. 1999 Duhui Road, 201108, Shanghai, P. R. China
Client:	[redacted]Technology Corp.
Client number:	105090
Address:	588 Qihang South Road, Binhai Industrial Zone Yinzhou District 315145 Ningbo, Zhejiang PEOPLE'S REPUBLIC OF CHINA
Standard:	This TUV SUD test report form is based on the following requirements: EN 527-2:2016/A1:2019
TRF number and revision:	TRF EN 527-2:2016/A1:2019 Rev.0:2025
eDoc_ID:	
Copyright blank test report:	© TUV SUD Group - All rights reserved This test report may only be quoted in full. Any use for advertising purposes must be granted in writing.
General disclaimer:	This test report is based on the content of the standard (see above). The test report considered selected clauses of the a.m. standard(s) and experience gained with product testing. It was prepared by TUV SUD Product Service. TUV SUD Group takes no responsibility for and will not assume liability for damages resulting from the reader's interpretation of the reproduced material due to its placement and context. This report is the result of a single examination of the object in question and is not generally applicable evaluation of the quality of other products in regular production.
Scheme:	☐ TUV Mark ☐ without certification ☒ AoC/CoC for EU-Directive / EU-Regulation: Machinery ☐ GS Mark ☐ NRTL Mark ☐ other:
Non-standard test method:	☒ No ☐ Yes, see details under *Summary of testing*
National deviations:	N/A
Number of pages *(Report)*:	12
Compiled by: (+ signature)	Cai, Zhao
Approved by: (+ signature)	Gu, Xiaodong

ID: 344209 Revision: 0 - released Effective: 18 Jun 2025 Page 1 of 12

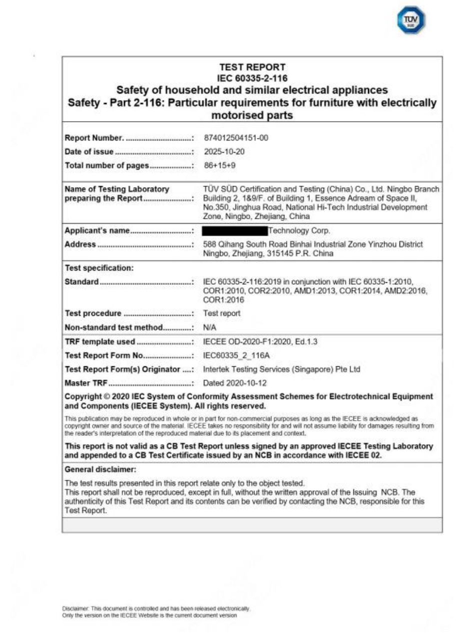

TEST REPORT
IEC 60335-2-116
Safety of household and similar electrical appliances
Safety - Part 2-116: Particular requirements for furniture with electrically motorised parts

Report Number.	874012504151-00
Date of issue	2025-10-20
Total number of pages	86+15+9
Name of Testing Laboratory preparing the Report	TÜV SÜD Certification and Testing (China) Co., Ltd. Ningbo Branch Building 2, 1&9/F. of Building 1, Essence Adream of Space II, No.350, Jinghua Road, National Hi-Tech Industrial Development Zone, Ningbo, Zhejiang, China
Applicant's name	[redacted]Technology Corp.
Address	588 Qihang South Road Binhai Industrial Zone Yinzhou District Ningbo, Zhejiang, 315145 P.R. China
Test specification:	
Standard	IEC 60335-2-116:2019 in conjunction with IEC 60335-1:2010, COR1:2010, COR2:2010, AMD1:2013, COR1:2014, AMD2:2016, COR1:2016
Test procedure	Test report
Non-standard test method	N/A
TRF template used	IECEE OD-2020-F1:2020, Ed.1.3
Test Report Form No.	IEC60335_2_116A
Test Report Form(s) Originator	Intertek Testing Services (Singapore) Pte Ltd
Master TRF	Dated 2020-10-12

Copyright © 2020 IEC System of Conformity Assessment Schemes for Electrotechnical Equipment and Components (IECEE System). All rights reserved.

This publication may be reproduced in whole or in part for non-commercial purposes as long as the IECEE is acknowledged as copyright owner and source of the material. IECEE takes no responsibility for and will not assume liability for damages resulting from the reader's interpretation of the reproduced material due to its placement and context.

This report is not valid as a CB Test Report unless signed by an approved IECEE Testing Laboratory and appended to a CB Test Certificate issued by an NCB in accordance with IECEE 02.

General disclaimer:

The test results presented in this report relate only to the object tested.
This report shall not be reproduced, except in full, without the written approval of the Issuing NCB. The authenticity of this Test Report and its contents can be verified by contacting the NCB, responsible for this Test Report.

Disclaimer: This document is controlled and has been released electronically.
Only the version on the IECEE Website is the current document version

CE-MD Report (EN 527-2 Section)	CE-MD Report (Safety Section)
Download	*Download*

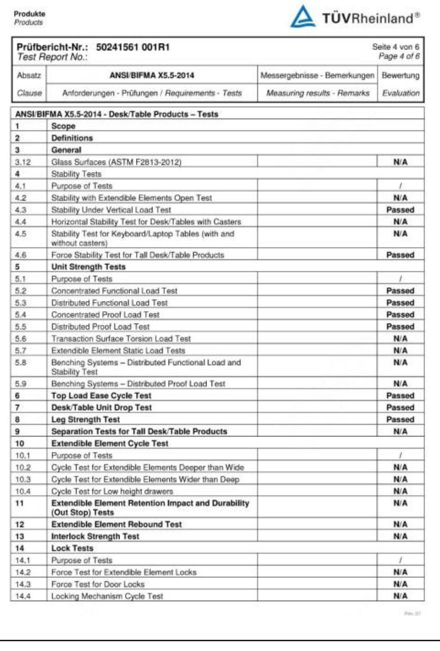

Produkte
Products

Prüfbericht-Nr.: **50241561 001R1** Seite 4 von 6
Test Report No.: *Page 4 of 6*

Absatz / *Clause*	**ANSI/BIFMA X5.5-2014** Anforderungen - Prüfungen / *Requirements - Tests*	Messergebnisse - Bemerkungen *Measuring results - Remarks*	Bewertung *Evaluation*
ANSI/BIFMA X5.5-2014 - Desk/Table Products – Tests			
1	**Scope**		
2	**Definitions**		
3	**General**		
3.12	Glass Surfaces (ASTM F2813-2012)		**N/A**
4	Stability Tests		
4.1	Purpose of Tests		/
4.2	Stability with Extendible Elements Open Test		**N/A**
4.3	Stability Under Vertical Load Test		**Passed**
4.4	Horizontal Stability Test for Desk/Tables with Casters		**N/A**
4.5	Stability Test for Keyboard/Laptop Tables (with and without casters)		**N/A**
4.6	Force Stability Test for Tall Desk/Table Products		**Passed**
5	**Unit Strength Tests**		
5.1	Purpose of Tests		/
5.2	Concentrated Functional Load Test		**Passed**
5.3	Distributed Functional Load Test		**Passed**
5.4	Concentrated Proof Load Test		**Passed**
5.5	Distributed Proof Load Test		**Passed**
5.6	Transaction Surface Torsion Load Test		**N/A**
5.7	Extendible Element Static Load Tests		**N/A**
5.8	Benching Systems – Distributed Functional Load and Stability Test		**N/A**
5.9	Benching Systems – Distributed Proof Load Test		**N/A**
6	**Top Load Ease Cycle Test**		**Passed**
7	**Desk/Table Unit Drop Test**		**Passed**
8	**Leg Strength Test**		**Passed**
9	**Separation Tests for Tall Desk/Table Products**		**N/A**
10	**Extendible Element Cycle Test**		
10.1	Purpose of Tests		/
10.2	Cycle Test for Extendible Elements Deeper than Wide		**N/A**
10.3	Cycle Test for Extendible Elements Wider than Deep		**N/A**
10.4	Cycle Test for Low height drawers		**N/A**
11	**Extendible Element Retention Impact and Durability (Out Stop) Tests**		**N/A**
12	**Extendible Element Rebound Test**		**N/A**
13	**Interlock Strength Test**		**N/A**
14	**Lock Tests**		
14.1	Purpose of Tests		/
14.2	Force Test for Extendible Element Locks		**N/A**
14.3	Force Test for Door Locks		**N/A**
14.4	Locking Mechanism Cycle Test		**N/A**

TEST REPORT
EN IEC 55014-1:2021
Electromagnetic compatibility – Requirements for household appliances, electric tools and similar apparatus. Part 1: Emission
EN IEC 55014-2:2021
Electromagnetic compatibility - Requirements for household appliances, electric tools and similar apparatus - Part 2: Immunity - Product family standard

Report Number.	NBZT022600300801
Date of issue	2026-03-27
Total number of pages	108
Testing Laboratory	Ningbo Drotek Testing Technology Service Co., Ltd.
Address	North Half, 2/F., Office Building, & Buliding18, No.518, Xinmei Road, High-tech Zone, Ningbo, Zhejiang, China (Phase II, Industrial Park of Ningbo AUX Industrial Management Co., Ltd.)
Applicant's name	Loctek Ergonomic Technology Corp.
Address	588 Qihang South Road, Binhai Industrial Zone Yinzhou District 315145 Ningbo, Zhejiang PEOPLE'S REPUBLIC OF CHINA
Test specification:	
Standard	EN IEC 55014-1:2021, EN IEC 55014-2:2021, EN IEC 61000-3-2:2019+A1:2021+A2:2024, EN 61000-3-3:2013+A1:2019+A2:2021
Test Report Form No	NBZTEMC-1.1
TRF Originator	Ningbo Drotek Testing Technology Service Co., Ltd.

General disclaimer:

The test results presented in this report relate only to the object tested.
Unless otherwise stated the results shown in this test report refer only to the sample(s) tested and such sample(s) are retained for 90 days only.
This publication may be reproduced in whole or in part for non-commercial purposes as long as the Ningbo Drotek Testing Technology Service Co., Ltd. is acknowledged as copyright owner and source of the material. Ningbo Drotek Testing Technology Service Co., Ltd. takes no responsibility for and will not assume liability for damages resulting from the reader's interpretation of the reproduced material due to its placement and context.

Test Item Description	Adjustable table frame
Trade Mark	N/A
Models	Refer to next page.
Ratings	100-240VAC, 50/60Hz, 300W, Type-C Interface Charging Functionality: a. Type-C Interface Output: PD3.0: DC 5V, 3A; DC 9V, 2.2A; DC 12V, 1.67A
Result	PASS

Compiled by:	**Supervised by:**	**Approved by:**
Nicole Zhou/ File administrators	LesSang Han/ Technique principal	Gorden Zhu/ Manager

www.drotek.com.cn [redacted]

BIFMA Report	CE-EMC Report
Download	*Download*

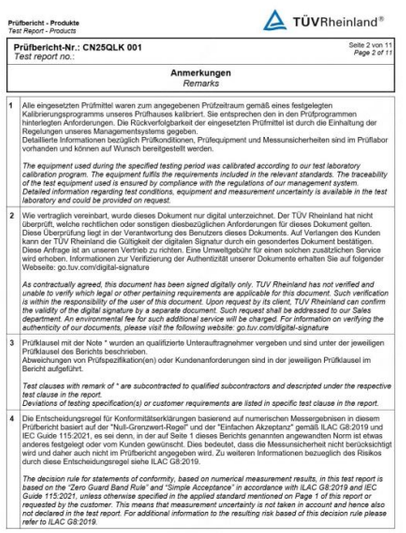

Prüfbericht - Produkte
Test Report - Products

TÜVRheinland®

Prüfbericht-Nr.: CN25QLK 001
Test report no.:

Seite 2 von 11
Page 2 of 11

Anmerkungen
Remarks

1 Alle eingesetzten Prüfmittel waren zum angegebenen Prüfzeitraum gemäß eines festgelegten Kalibrierungsprogramms unseres Prüfhauses kalibriert. Sie entsprechen den in den Prüfprogrammen hinterlegten Anforderungen. Die Rückverfolgbarkeit der eingesetzten Prüfmittel ist durch die Einhaltung der Regelungen unseres Managementsystems gegeben.
Detaillierte Informationen bezüglich Prüfkonditionen, Prüfequipment und Messunsicherheiten sind im Prüflabor vorhanden und können auf Wunsch bereitgestellt werden.

The equipment used during the specified testing period was calibrated according to our test laboratory calibration program. The equipment fulfils the requirements included in the relevant standards. The traceability of the test equipment used is ensured by compliance with the regulations of our management system.
Detailed information regarding test conditions, equipment and measurement uncertainty is available in the test laboratory and could be provided on request.

2 Wie vertraglich vereinbart, wurde dieses Dokument nur digital unterzeichnet. Der TÜV Rheinland hat nicht überprüft, welche rechtlichen oder sonstigen diesbezüglichen Anforderungen für dieses Dokument gelten. Diese Überprüfung liegt in der Verantwortung des Benutzers dieses Dokuments. Auf Verlangen des Kunden kann der TÜV Rheinland die Gültigkeit der digitalen Signatur durch ein gesondertes Dokument bestätigen. Diese Anfrage ist an unseren Vertrieb zu richten. Eine Umweltgebühr für einen solchen zusätzlichen Service wird erhoben. Informationen zur Verifizierung der Authentizität unserer Dokumente erhalten Sie auf folgender Webseite: go.tuv.com/digital-signature

As contractually agreed, this document has been signed digitally only. TUV Rheinland has not verified and unable to verify which legal or other pertaining requirements are applicable for this document. Such verification is within the responsibility of the user of this document. Upon request by its client, TUV Rheinland can confirm the validity of the digital signature by a separate document. Such request shall be addressed to our Sales department. An environmental fee for such additional service will be charged. For information on verifying the authenticity of our documents, please visit the following website: go.tuv.com/digital-signature

3 Prüfklausel mit der Note * wurden an qualifizierte Unterauftragnehmer vergeben und sind unter der jeweiligen Prüfklausel des Berichts beschrieben.
Abweichungen von Prüfspezifikation(en) oder Kundenanforderungen sind in der jeweiligen Prüfklausel im Bericht aufgeführt.

*Test clauses with remark of * are subcontracted to qualified subcontractors and descripted under the respective test clause in the report.*
Deviations of testing specification(s) or customer requirements are listed in specific test clause in the report.

4 Die Entscheidungsregel für Konformitätserklärungen basierend auf numerischen Messergebnisen in diesem Prüfbericht basiert auf der "Null-Grenzwert-Regel" und der "Einfachen Akzeptanz" gemäß ILAC G8:2019 und IEC Guide 115:2021, es sei denn, in der auf Seite 1 dieses Berichts genannten angewandten Norm ist etwas anderes festgelegt oder vom Kunden gewünscht. Dies bedeutet, dass die Messunsicherheit nicht berücksichtigt wird und daher auch nicht im Prüfbericht angegeben wird. Zu weiteren Informationen bezuglich des Risikos durch diese Entscheidungsregel siehe ILAC G8:2019.

The decision rule for statements of conformity, based on numerical measurement results, in this test report is based on the "Zero Guard Band Rule" and "Simple Acceptance" in accordance with ILAC G8:2019 and IEC Guide 115:2021, unless otherwise specified in the applied standard mentioned on Page 1 of this report or requested by the customer. This means that measurement uncertainty is not taken in account and hence also not declared in the test report. For additional information to the resulting risk based of this decision rule please refer to ILAC G8:2019.

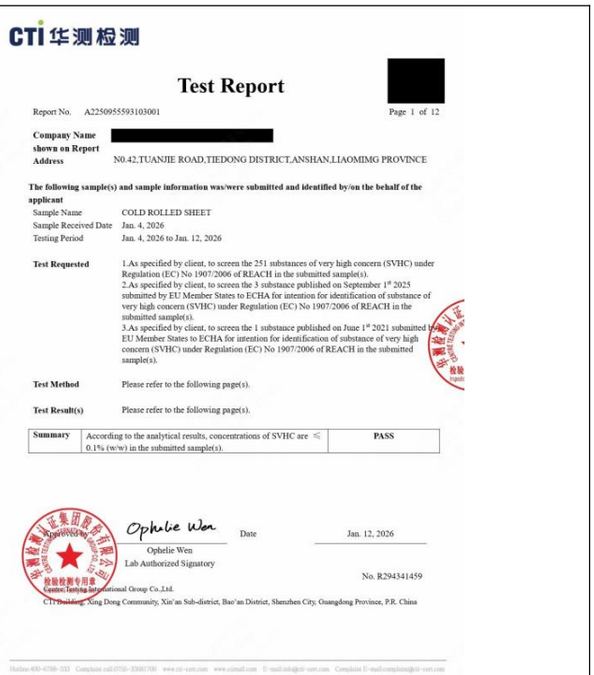

CTI 华测检测

Test Report

[redacted]

Report No. A225095559310300 1

Page 1 of 12

Company Name shown on Report [redacted]

Address N0.42,TUANJIE ROAD,TIEDONG DISTRICT,ANSHAN,LIAOMIMG PROVINCE

The following sample(s) and sample information was/were submitted and identified by/on the behalf of the applicant

Sample Name COLD ROLLED SHEET
Sample Received Date Jan. 4, 2026
Testing Period Jan. 4, 2026 to Jan. 12, 2026

Test Requested 1.As specified by client, to screen the 251 substances of very high concern (SVHC) under Regulation (EC) No 1907/2006 of REACH in the submitted sample(s).
2.As specified by client, to screen the 3 substance published on September 1st 2025 submitted by EU Member States to ECHA for intention for identification of substance of very high concern (SVHC) under Regulation (EC) No 1907/2006 of REACH in the submitted sample(s).
3.As specified by client, to screen the 1 substance published on June 1st 2021 submitted by EU Member States to ECHA for intention for identification of substance of very high concern (SVHC) under Regulation (EC) No 1907/2006 of REACH in the submitted sample(s).

Test Method Please refer to the following page(s).

Test Result(s) Please refer to the following page(s).

Summary	According to the analytical results, concentrations of SVHC are ≤ 0.1% (w/w) in the submitted sample(s).	**PASS**

Ophelie Wen
Ophelie Wen
Lab Authorized Signatory

Date Jan. 12, 2026

No. R294341459

Centre Testing International Group Co.,Ltd.
CTI Building, Xing Dong Community, Xin'an Sub-district, Bao'an District, Shenzhen City, Guangdong Province, P.R. China

Hotline:400-6788-333 Complaint call:0755-33681700 www.cti-cert.com www.ctimall.com E-mail:info@cti-cert.com Complaint E-mail:complaint@cti-cert.com

CB38M2M(IB) Control System ERP Report	REACH Test Report
Download	*Download*

CTI 华测检测

Test Report

Report No. A225095559310207 Page 1 of 9

Company Name shown on Report [redacted]

Address N0.42,TUANJIE ROAD,TIEDONG DISTRICT,ANSHAN,LIAOMIMG PROVINCE

The following sample(s) and sample information was/were submitted and identified by/on the behalf of the applicant

Sample Name(s) OILED GALVANIZING SHEET（NO CHROMATING）
Sample Received Date Jan. 4, 2026
Testing Period Jan. 4, 2026 to Jan. 6, 2026

Test Requested As specified by client, to test Lead (Pb), Cadmium (Cd), Mercury (Hg), Hexavalent Chromium (CrVI)), Polybrominated Biphenyls (PBBs), Polybrominated Diphenyl Ethers (PBDEs), Phthalates (DBP, BBP, DEHP, DIBP) in the submitted sample(s).

Test Method/Test Result(s) Please refer to the following page(s).

Conclusion

Tested Sample	According to standard/directive	Result
Submitted Sample	RoHS Directive 2011/65/EU with amendment (EU) 2015/863	PASS

PASS means that the results shown on the report comply with the limits set by RoHS Directive 2011/65/EU with amendment (EU) 2015/863.

Hill Zheng Date Jan. 6, 2026
Hill Zheng
Technical Manager

No. R294344146

CTI Building, Xing Dong Community, Xin'an Sub-district, Bao'an District, Shenzhen City, Guangdong Province, P.R. China

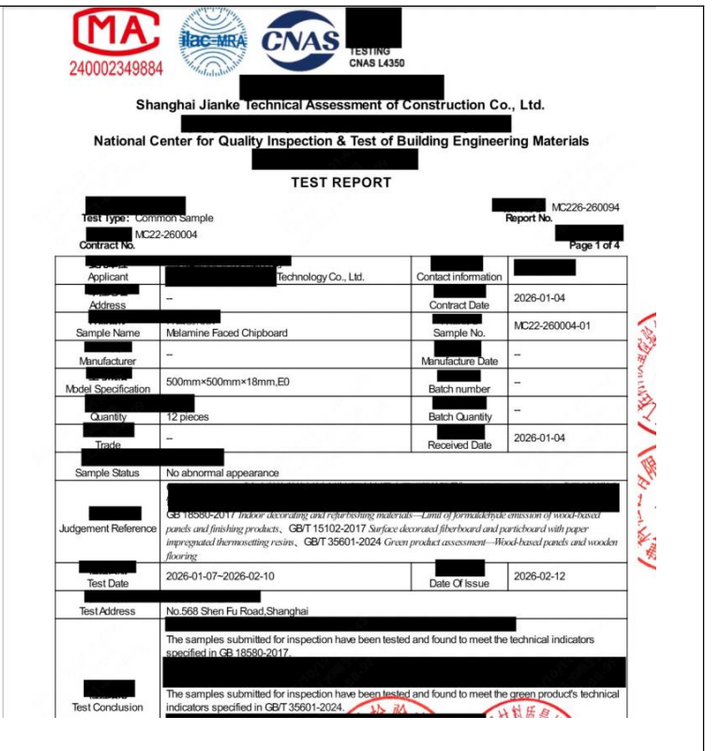

MA 240002349884 ilac-MRA CNAS [redacted] TESTING CNAS L4350

[redacted]

Shanghai Jianke Technical Assessment of Construction Co., Ltd.

[redacted]

National Center for Quality Inspection & Test of Building Engineering Materials

[redacted]

TEST REPORT

[redacted] **Test Type:** Common Sample [redacted] MC226-260094 **Report No.** [redacted]
[redacted] MC22-260004 **Contract No.** **Page 1 of 4**

[redacted] Applicant	[redacted] Technology Co., Ltd.	[redacted] Contact information	[redacted]
[redacted] Address	--	[redacted] Contract Date	2026-01-04
[redacted] Sample Name	Melamine Faced Chipboard	[redacted] Sample No.	MC22-260004-01
[redacted] Manufacturer	--	[redacted] Manufacture Date	--
[redacted] Model Specification	500mm×500mm×18mm,E0	[redacted] Batch number	--
[redacted] Quantity	12 pieces	[redacted] Batch Quantity	--
[redacted] Trade	--	[redacted] Received Date	2026-01-04
[redacted] Sample Status	No abnormal appearance		
[redacted] Judgement Reference	[redacted] GB 18580-2017 *Indoor decorating and refurbishing materials—Limit of formaldehyde emission of wood-based panels and finishing products*、GB/T 15102-2017 *Surface decorated fiberboard and particleboard with paper impregnated thermosetting resins*、GB/T 35601-2024 *Green product assessment—Wood-based panels and wooden flooring*		
[redacted] Test Date	2026-01-07~2026-02-10	[redacted] Date Of Issue	2026-02-12
[redacted] Test Address	No.568 Shen Fu Road,Shanghai		
[redacted] Test Conclusion	[redacted] The samples submitted for inspection have been tested and found to meet the technical indicators specified in GB 18580-2017. [redacted] The samples submitted for inspection have been tested and found to meet the green product's technical indicators specified in GB/T 35601-2024.		

RoHS Test Report	Tabletop Material Test Report
Download	*Download*

ATTESTATION ◆ ATTESTATO ◆ ATTESTACIÓN ◆ BESCHEINIGUNG ◆ ATTESTATION

Attestation of Conformity

No. M8A 105090 0161 Rev. 00

Holder of Attestation: [redacted] **Technology Corp.**
988 Lanjiang South Road, Binhai Industrial Zone
Yinzhou District
315145 Ningbo, Zhejiang
PEOPLE'S REPUBLIC OF CHINA

Product: **Table frames**
Adjustable Table Frame

This Attestation of Conformity is issued on a voluntary basis according to Council Directive 2006/42/EC relating to machinery. It confirms that the listed equipment (not Annex IV equipment) complies with the principal protection requirements of the directive and is based on the technical specifications applicable at the time of issuance. It refers only to the particular sample submitted for conformity assessment. For details see: www.tuvsud.com/ps-cert

Test report no.: 704042505804-00

Date, 2025-11-07

(Junjie (Steven) Xu)

Page 1 of 3
This Attestation does not replace the regulatory EU Declaration of Conformity (DoC) and does not allow for CE marking. After preparation of the necessary documentation and establishing compliance to requirements of all applicable directives, the manufacturer may sign a DoC and apply the CE marking. The DoC is issued under the sole responsibility of the manufacturer.

TÜV SÜD Product Service GmbH • Ridlerstraße 65 • 80339 Munich • Germany

CE-MD Certificate

[Download](#)

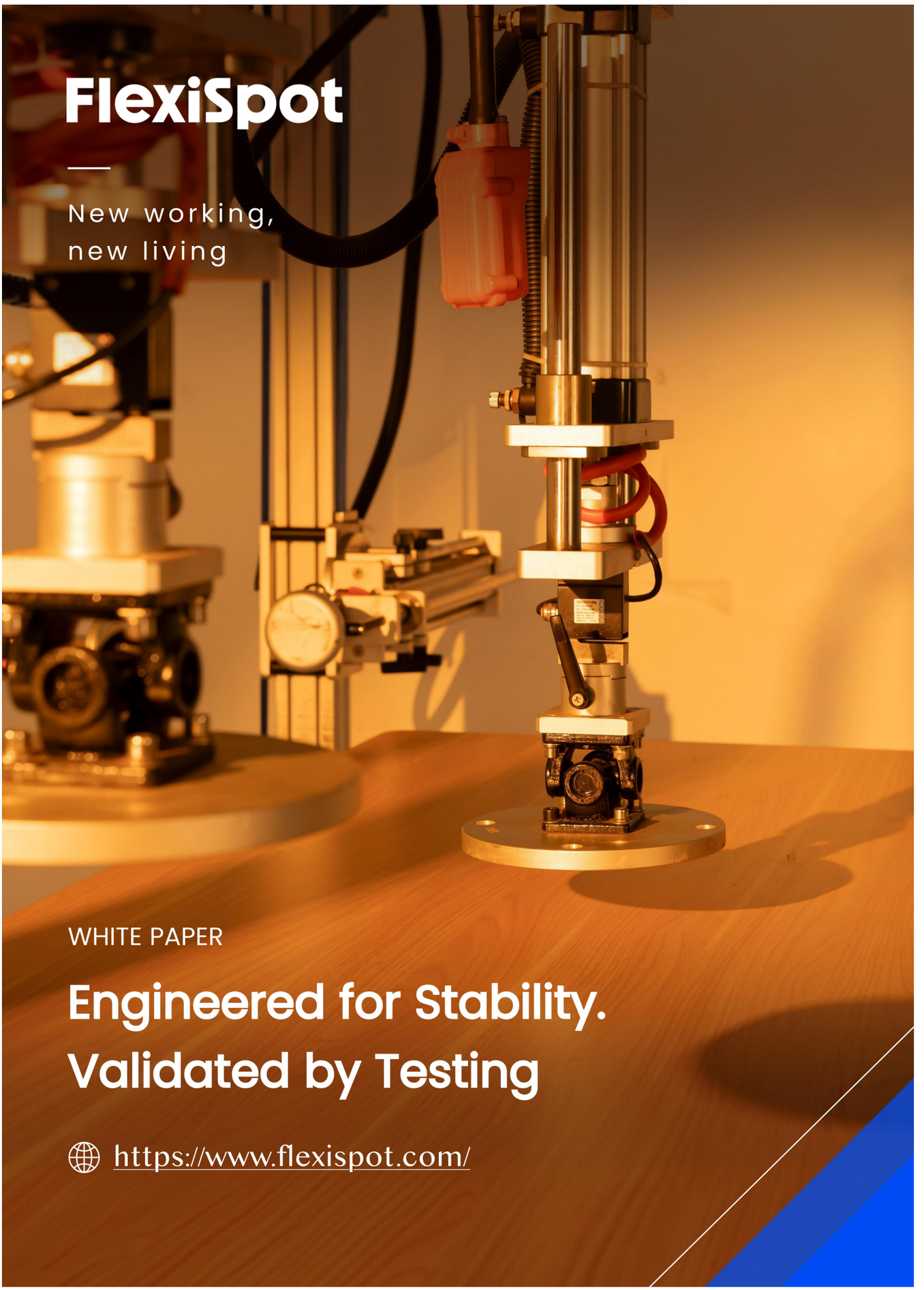

FlexiSpot

New working,
new living

WHITE PAPER

Engineered for Stability. Validated by Testing

https://www.flexispot.com/