New Working
New Living

Website: www.flexispot.com
Tel: 1-855-585-5618
Address: 6475 Las Positas Rd. Livermore, CA 94551

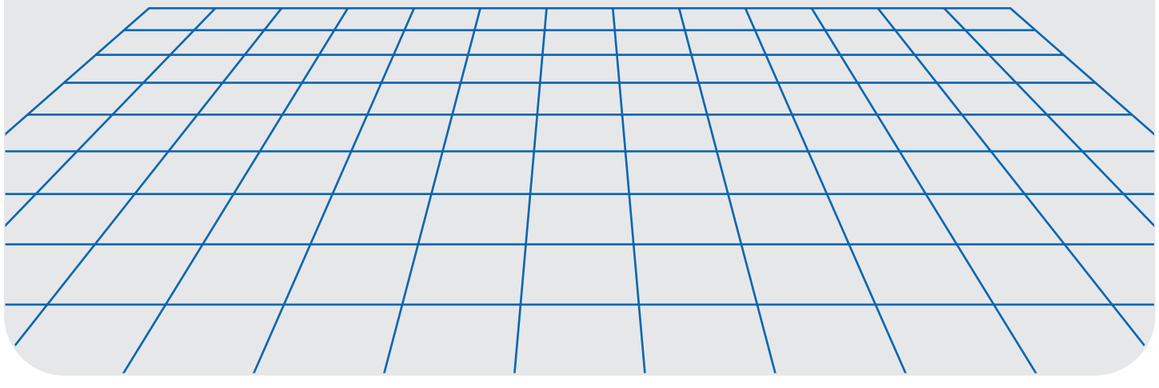

260415A

FlexiSpot

User Manual

Item No. DT6X-NA3-PW-45 / DT6X-NA3-RB-45

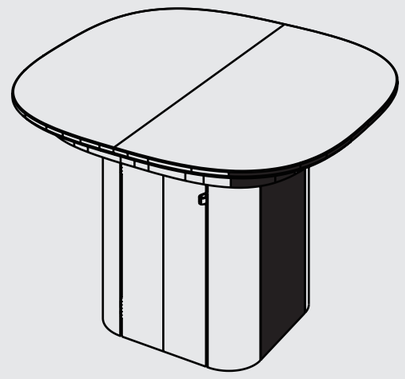

Option A

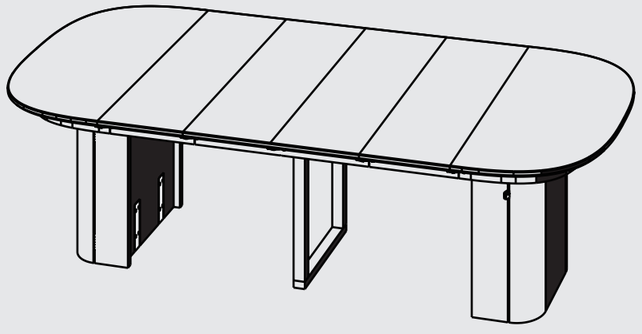

Option B

INSTRUCTIONS –
KEEP FOR FUTURE REFERENCE

PRIMARY MATERIALS

Main Material	Rubberwood, Plywood, Oak Veneer

HARDWARE PACK CONTENTS

Note: The following line drawings are for reference only and in some cases may be different from the actual part; please refer to the actual part. If you find missing parts or have installation problems, please contact customer service.

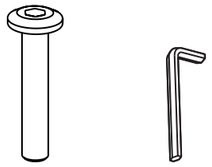

Ax16 Bx1

ASSEMBLY PREPARATION

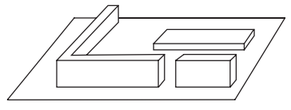

Assemble on a carpet to prevent scratches.

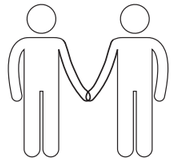

Assembly by two or more people is recommended.

PARTS LIST

Package - ET

③ x4	④ x2	⑤ x1	⑥ x1
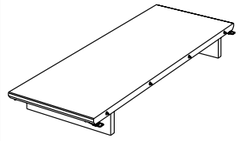	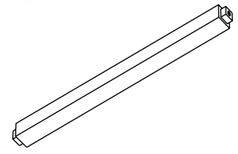	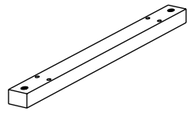	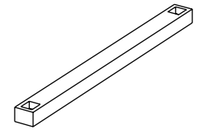
Extension Leaf	Support Post	Upper Crossbar	Lower Crossbar

Package - F

② x2

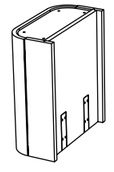

Base

Package - T

① x1

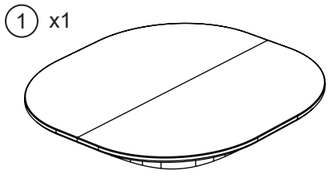

Tabletop

1 Install the Bases and Tabletop

1

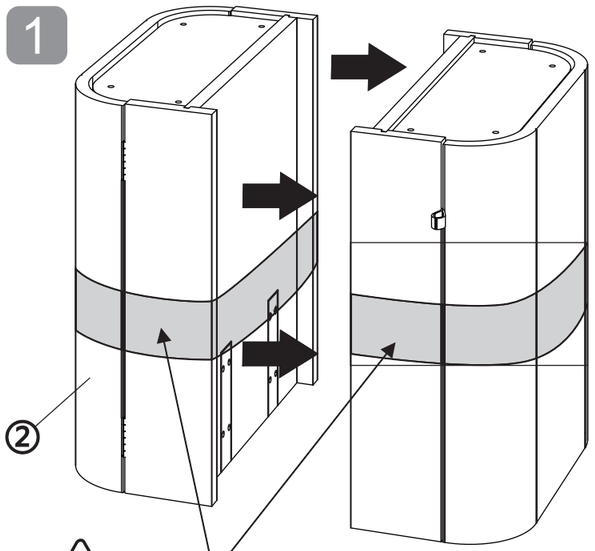

Remove the protective film before assembly

Tighten the tabletop latches.

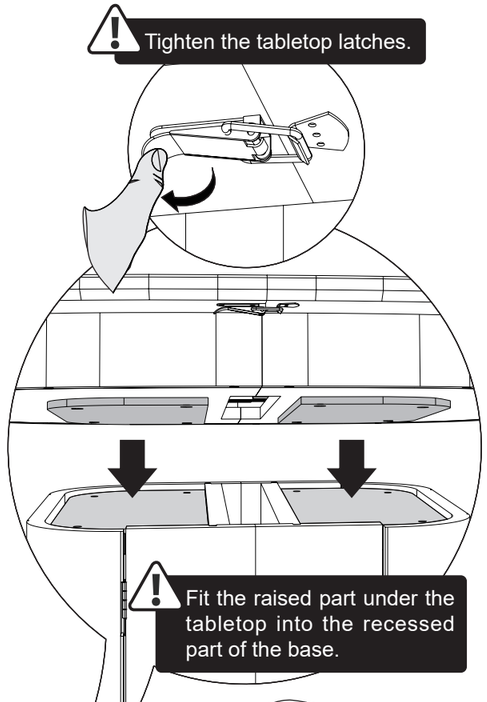

Fit the raised part under the tabletop into the recessed part of the base.

2

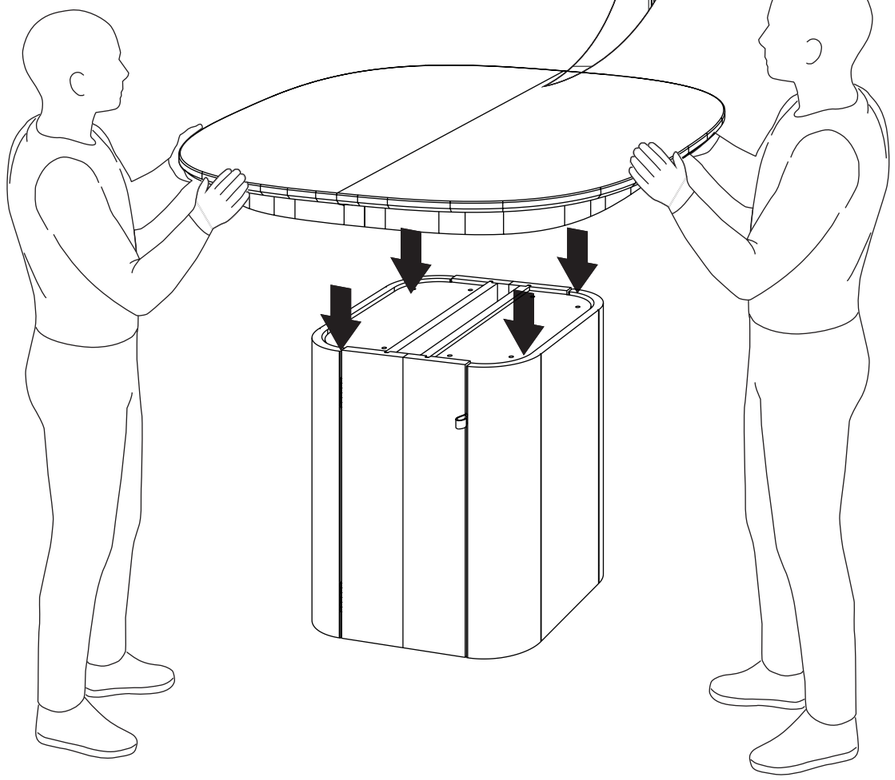

2 Secure the Tabletop to the Bases

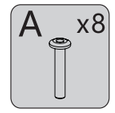

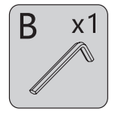

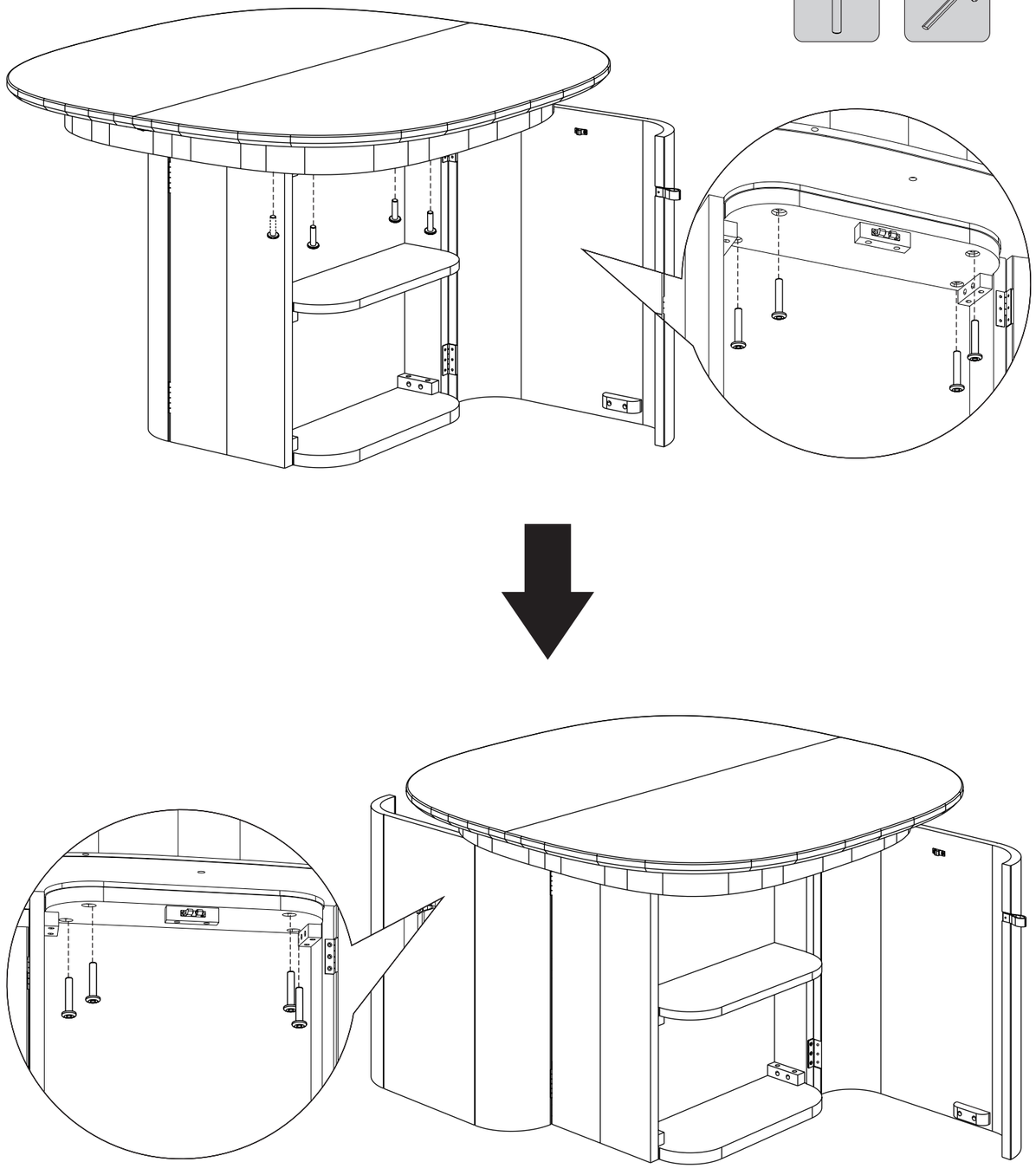

A-3 Close the Cabinet Doors

OPTION A COMPLETE

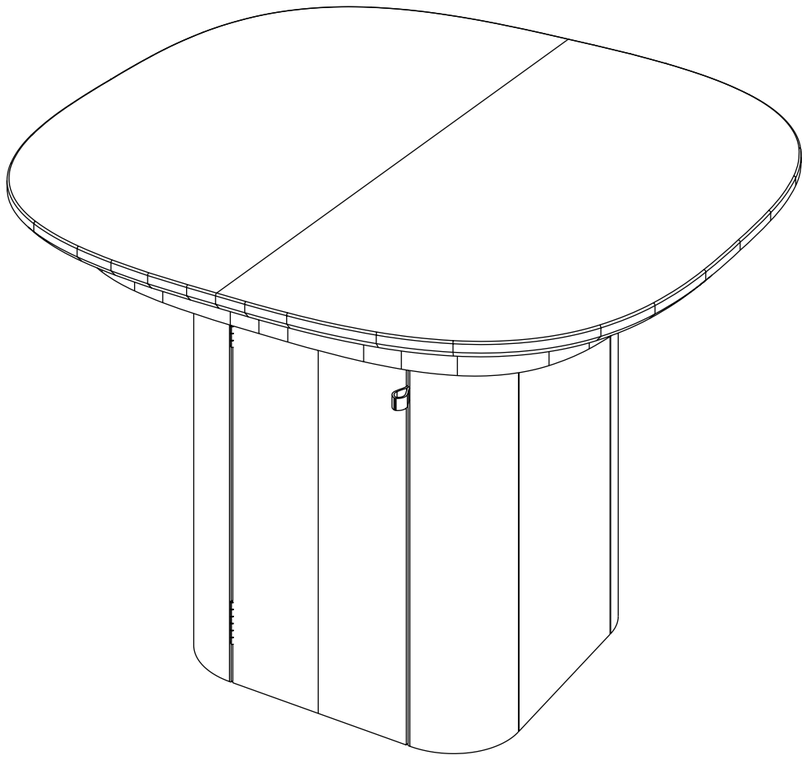

B-3 Extend the Table

Release the latches before extending the table.

1

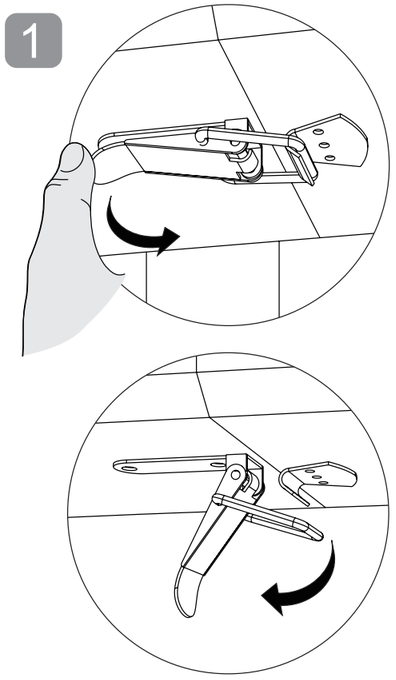

2

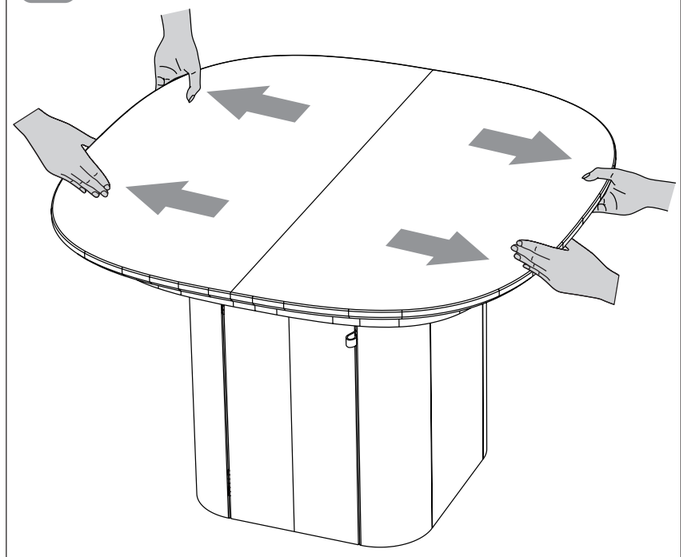

3

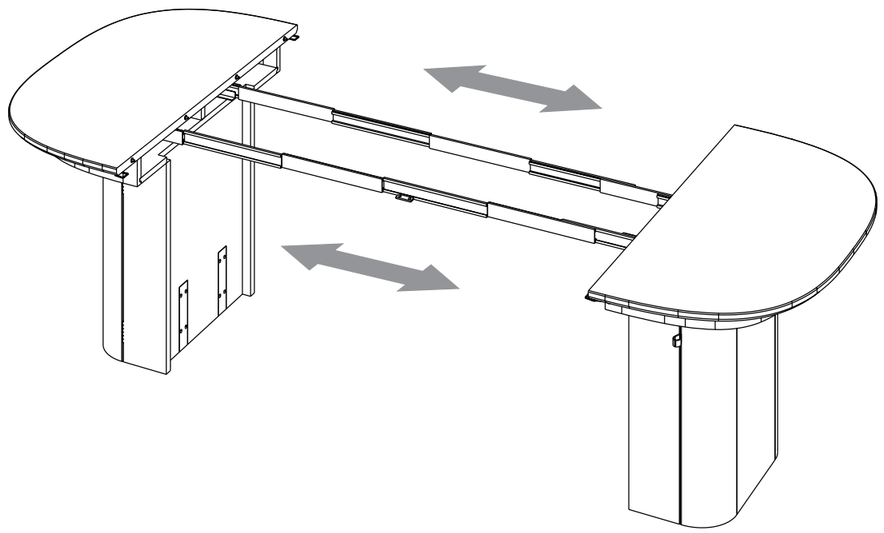

B-4 Install the Support Legs

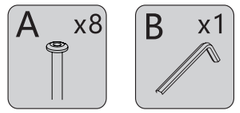

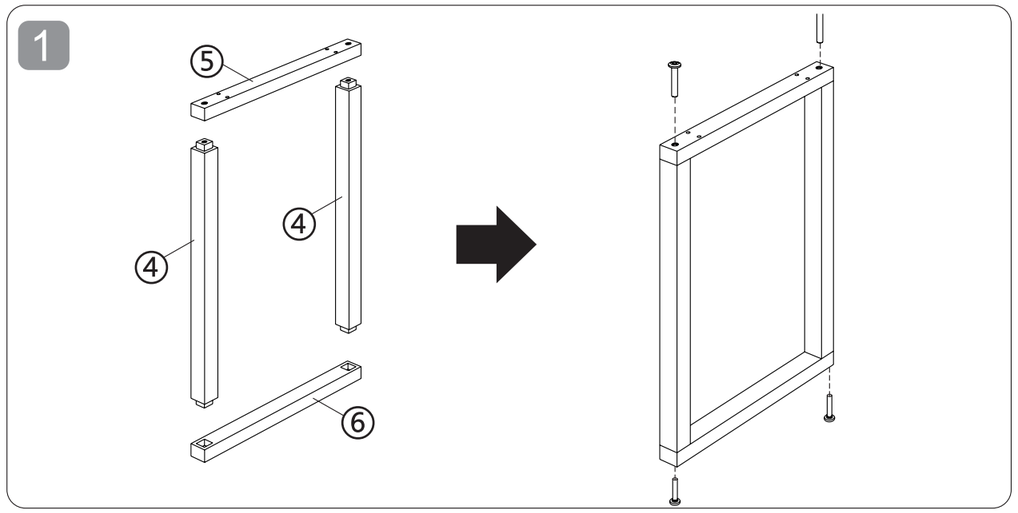

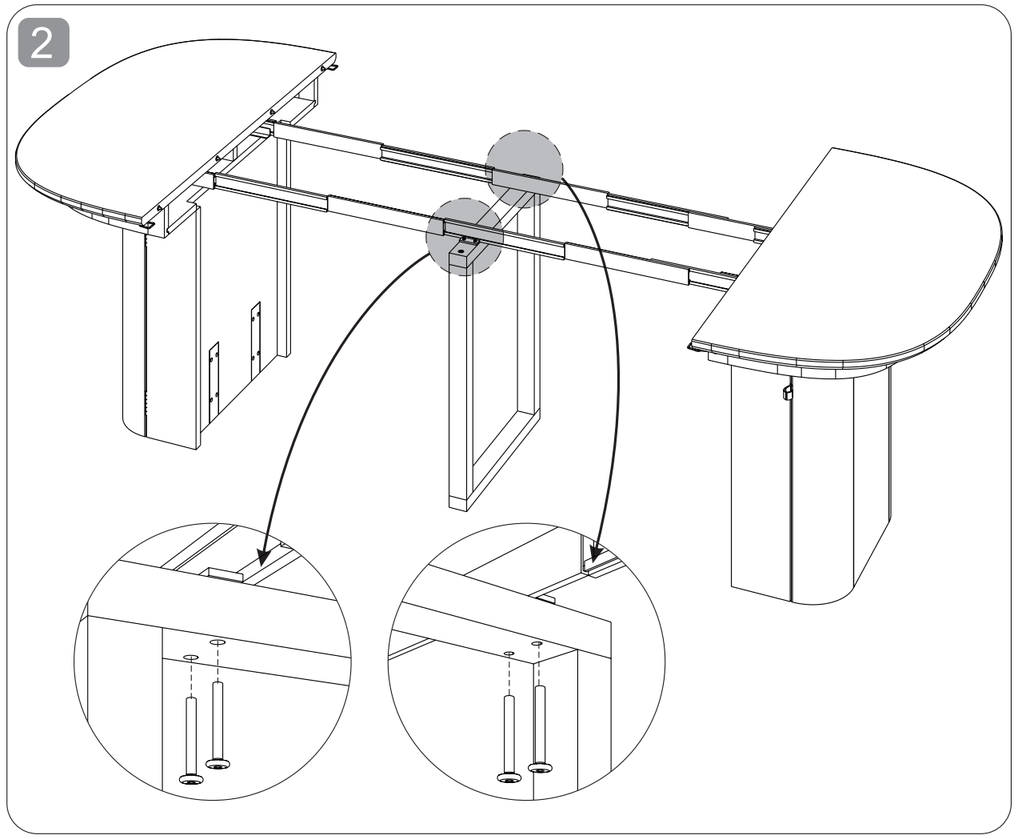

B-5 Position the Extension Leaves

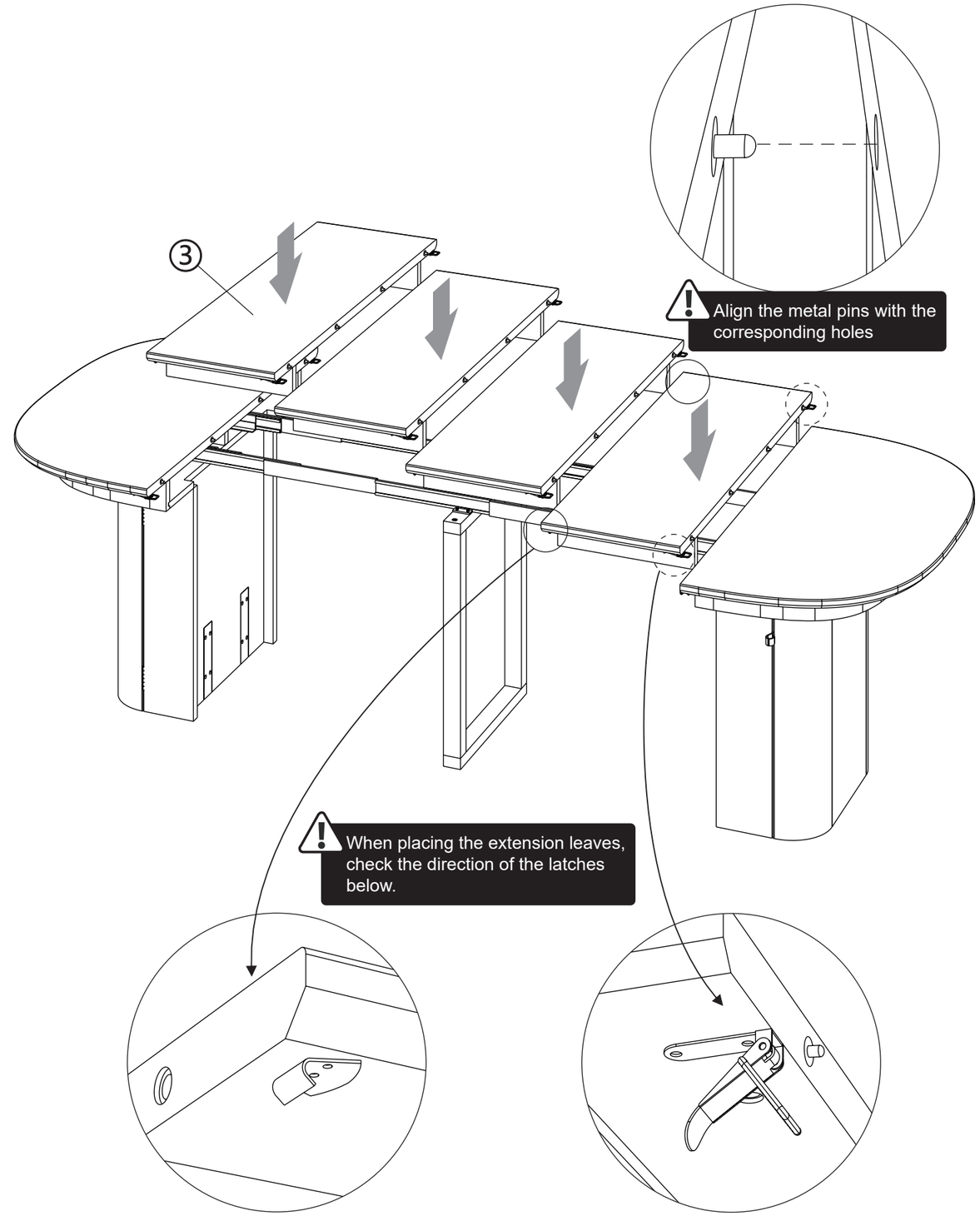

B-6 Secure the Extension Leaves

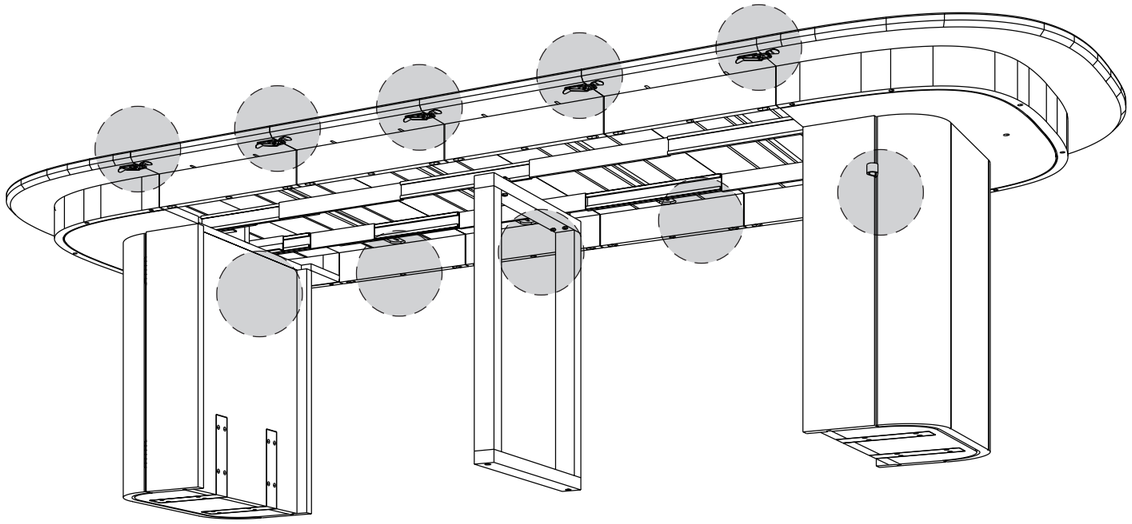

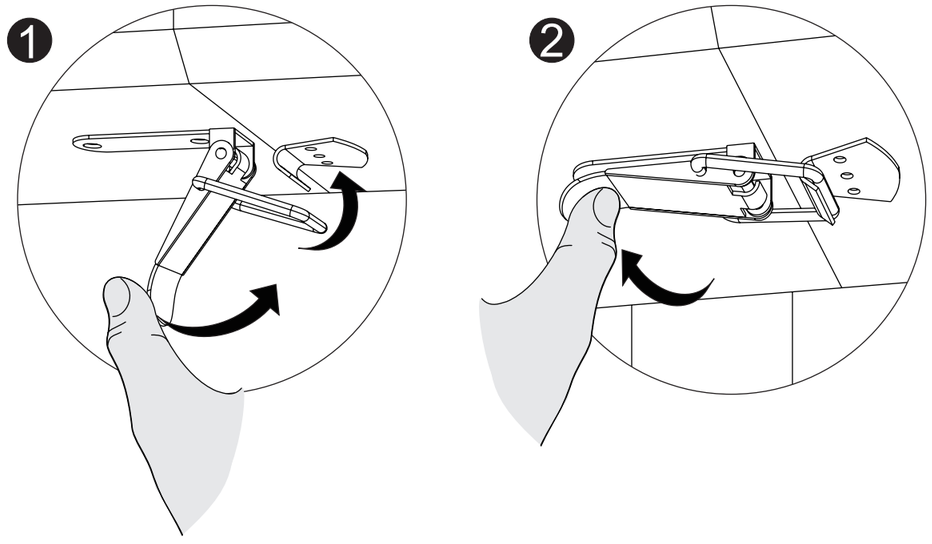

SAFETY PRECAUTIONS

1.Operating environment: Indoor use only. Temperature range: 0–40°C (32–104°F).

2.Before use, ensure that the product is fully and correctly assembled. Use only the fittings supplied by the manufacturer. Maintain sufficient clearance around the product to prevent pinch injuries. Regularly check all screws and tighten any that are loose.

3.Before using the product for the first time, familiarize yourself with all its functions.

4.Do not allow children to play on the product. Children's behavior can be unpredictable. The manufacturer is not responsible for hazards resulting from such behavior.

5.Use the product only after understanding the associated risks. Children aged 14 or younger and individuals with physical, sensory, or cognitive impairments must use the product only under appropriate supervision and guidance.

6.Children must not use the product unsupervised.

7.Children must not clean or maintain the product unless supervised by an adult.
Keep the work area clear of hazards. Do not leave tools lying around. Handle packaging materials with care. Keep plastic bags and other packaging materials out of children's reach to prevent suffocation and other hazards.

8.This product contains small parts that may pose a choking hazard if swallowed. Keep all small parts and accessories out of children's reach.

9.Do not use corrosive or abrasive cleaners to clean the product. Dispose of cleaning agents in accordance with local environmental regulations.

10.Before moving the table, remove all items from its surface and storage compartments, securely close all drawers and doors, and ensure that all screws are tight. At least two people are required to move the table. Keep the original packaging for future transport, if needed.

11.For long-term storage, remove all items from the product and store it in a cool, dry place.

12.Dispose of the product in accordance with applicable local regulations. Do not dispose of it with household waste.